THE RIGHT WAY!™

S-5!®
The Right Way

SOLAR MANUAL

AU/NZ Edition



Made in USA

S-5!®
The Right Way

TABLE OF CONTENTS

Section 1: System Design & Installation 2
PVKIT And Components 2
System Design 3
Terrain Category 3
Wind Region 4
Roof & Building Details 5
The Metal Roof System/Profile 5
Required Attachment Quantities 8
Clamp Count & Spacing Tables 9
Site Specific Calculations 10
PVKIT and Module Mounting Considerations 11
The Module 11
Clamp Spacing Considerations 12
Roof Clips 13
Layout 14
Installation of PVKIT with Clamp 15
Removal/O&M of PVKIT System & Clamp 18
PV Rail or Tilted Rack Attachment. 19

Section 2: References **21**
2.1 PVKIT Components, Clamp, & Bracket Specifications 21
2.1.1 Clamp Specifications 21
2.1.2 Bracket Specifications 22
2.1.3 PVKIT Component Specifications 22
2.1.4 Metallurgical Compatibility 23
2.1.5 Torque. 24
2.2 Codes & Standards 25
2.3 Earthing Info & Path for PVKIT 26
2.4 Basic Engineering Drawings 29
2.4.1 PVKIT Component Drawings 29
2.4.2 Clamp Drawings 30
2.4.3 Bracket Drawings 32
2.5 Warranties 34
2.6 Warnings 35
Appendix: Certifications **37**

© S-5!®, 2024. No part of the materials, including technical drawings, available in this manual or through the www.S-5.com site may be copied, photo-copied, reproduced, translated or reduced to any electronic medium or machine-readable form, in whole or in part, without prior written consent of S-5!®. Any other reproduction in any form without the permission of S-5!® - Metal Roof Innovations, Ltd. is prohibited. All materials contained within this manual and on www.S-5.com are protected by United States copyright law and may not be reproduced, distributed, transmitted, displayed, published or broadcast without the prior written permission of S-5!® - Metal Roof Innovations Ltd. Version:073124

PVKIT AND COMPONENTS

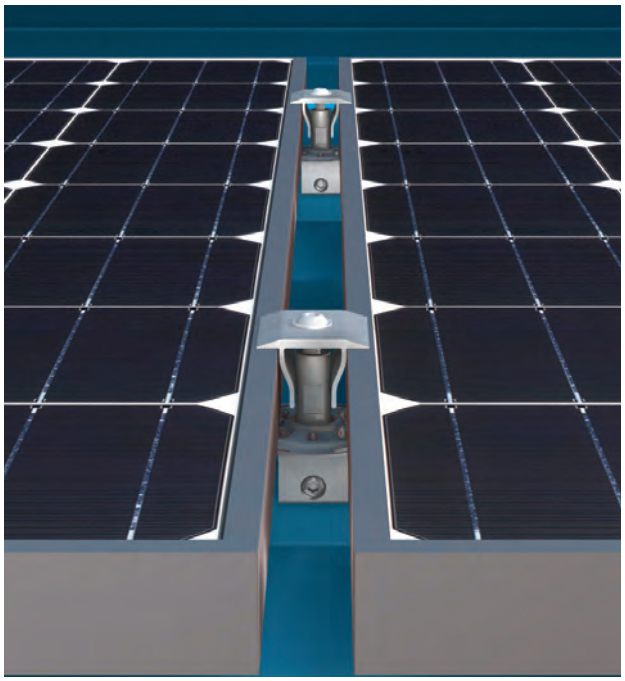

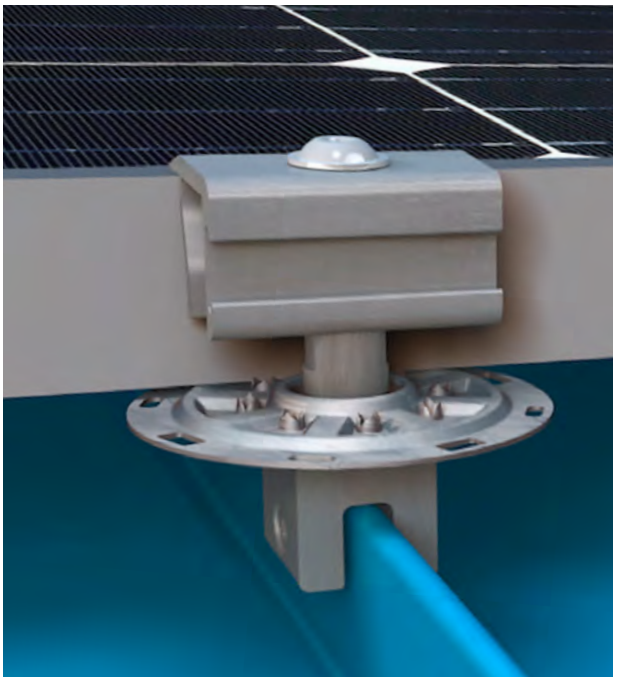

The restrictions to locating the S-5! PVKIT and clamp are: 1) the module manufacturer's allowable mounting locations or tested load configurations (with module producer's approval); and 2) uniformly transferring the service loads to the metal roof panels; then through the roof panels' fastening to the building structure.

This describes the load chain experienced on any PV assembly to the roof. The "weak link" may be the flexural strength of the metal roof panel or the metal roof panel's connection to the building structure. Further information that describes a conservative design approach can be found in Section 1.4.2.2.

PV Mounting Assembly | Mid Condition

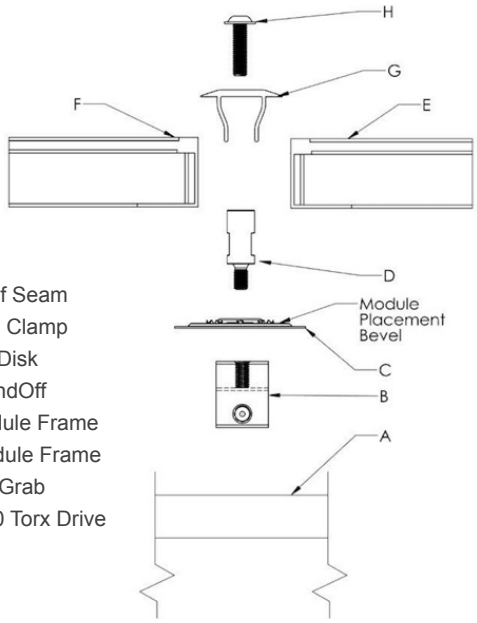

A. Roof Seam
B. S-5! Clamp
C. PV Disk
D. StandOff
E. Module Frame
F. Module Frame
G. MidGrab
H. T-30 Torx Drive

PV Mounting Assembly | Edge Condition

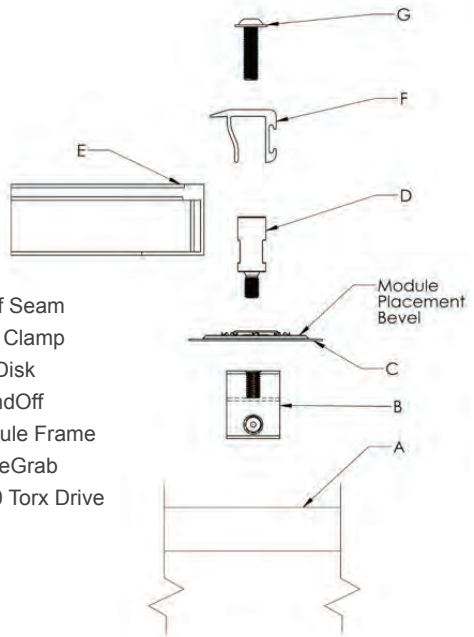

A. Roof Seam
B. S-5! Clamp
C. PV Disk
D. StandOff
E. Module Frame
F. EdgeGrab
G. T-30 Torx Drive

SYSTEM DESIGN



A site specific system design is the first step in the PV project. Gather the following site details in preparation for determining design loads required for the system:

Basic Site Details
- **Terrain Category**
- **Wind Region**
- **Roof & Building Details**

Details for Advanced Analysis
- **Importance Level**
- **Topographic Information**
- **Snow Region, Exposure, & Terrain Classification**
- **Shielding building information**

TERRAIN CATEGORY

Determine the terrain category of the site, keeping in mind what the surroundings will be for the life of the PV system.

Terrain Category 1 (TC1)- Very exposed open terrain with very few or no obstructions, and all water surfaces (e.g. flat, treeless, poorly grassed plains; open ocean, rivers, canals, bays and lakes).
Terrain Category 2 (TC2)- Open terrain, including grassland, with well-scattered obstructions having heights generally from 1.5 m to 5 m, with no more than two obstructions per hectare (e.g., farmland and cleared subdivisions with isolated trees and uncut grass).
Terrain Category 2.5 (TC2.5)- Terrain with some trees or isolated obstructions, terrain in developing outer urban areas with scattered houses, or large acreage developments with more than two and less than 10 buildings per hectare.
Terrain Category 3 (TC3)- Terrain with numerous closely spaced obstructions having heights generally from 3 m to 10 m. The minimum density of obstructions shall be at least the equivalent of 10 house-size obstructions per hectare (e.g., suburban housing, light industrial estates or dense forests).
Terrain Category 4 (TC4)- Terrain with numerous large, high (10 m to 30 m tall) and closely spaced constructions, such as large city centers and well-developed industrial complexes.

WIND REGION

Determine the wind region for your installation site based on location.

Region Definition:

Wind Regions are pre-defined for all of Australia and New Zealand AS/NZS 1170.2-2021. The Wind Region does not reflect surrounding topography or buildings. Peak gust wind data is defined for each region and the design wind speeds are based on the region wind speed, modified as necessary to reflect the effects of local topography, shielding, building height, etc.

Wind speeds in Australia are characterized by non-cyclonic and cyclonic areas. Regions A(0 to 5), B1, and B2 are non-cyclonic while regions C and D are cyclonic, with wind speeds being the highest closer to the coast. Reference figure 3.1(A) for Australia (from AS/NZS 1170.2-2021).

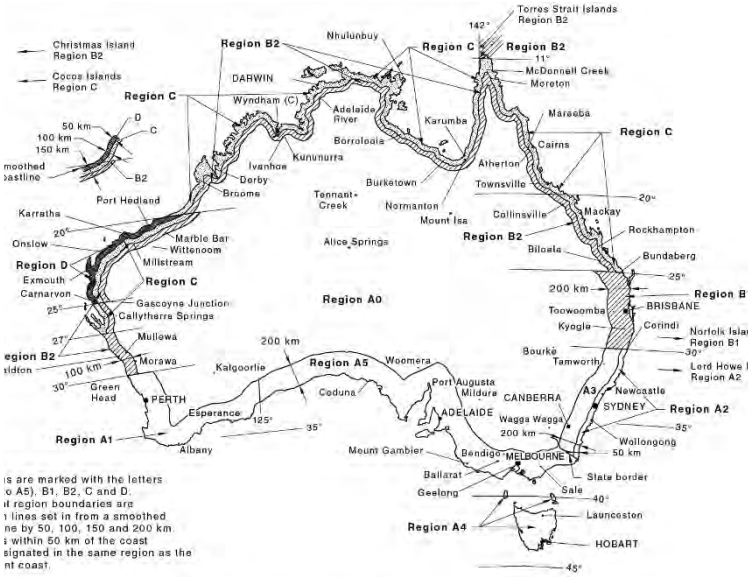

Figure 3.1(A) — Wind regions — Australia

New Zealand is simply divided into 4 zones. Reference figure 3.1(B) for New Zealand (from AS/NZS 1170.2-2021).

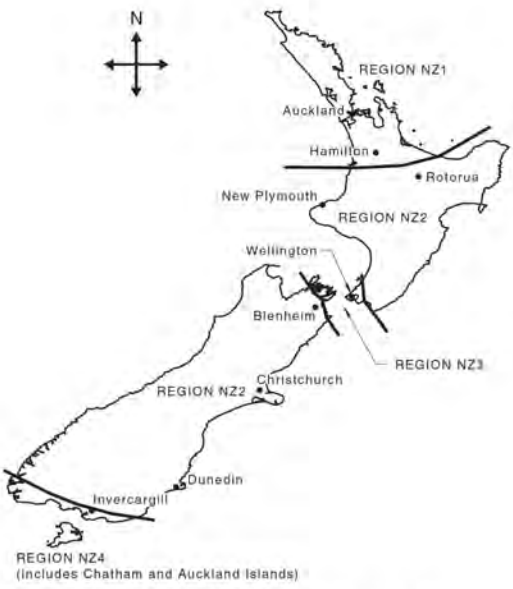

Figure 3.1(B) — Wind regions — New Zealand

ROOF & BUILDING DETAILS

Details and dimensions of the roof and building are required for the system design. These can be found by referencing building plans, interaction with the contractor, or from a site inspection. These details include:

Roof Type- Is the roof gable, single slope, or hip. When performing site specific calculations, this detail will dictate the pressure coefficients used.

Slope- The roof slope is also a determining factor in selecting the pressure coefficients for calculation. For roof slopes ≥ 10˚ each roof type has a different wind zone layout.

Average Roof Height, h (m)- Wind pressures are determined at the average roof height, the average of the eave and ridge heights.

Building Dimensions, b & d (m)- Only two dimensions, breadth and depth are required for each roof surface considered. The breadth, b is the length of the eave. The depth of the building is the eave to eave distance (or eave to ridge for single slope)

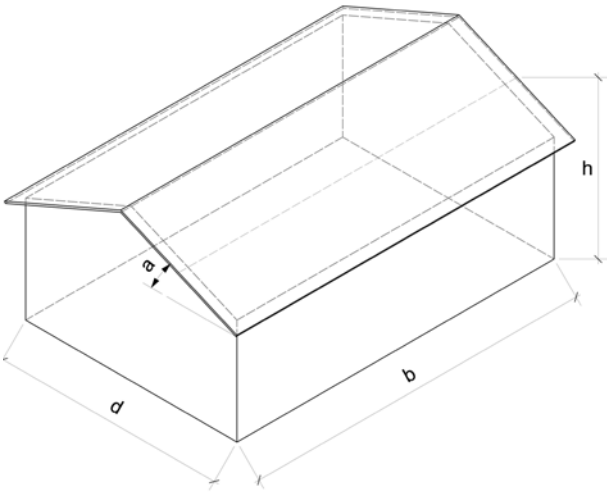

Note: When referencing clamp count and spacing tables to perfom a basic design analysis, the only building dimension needed is the average roof height.

THE METAL ROOF SYSTEM/PROFILE

Please see the diagrams below to choose the S-5! bracket or the S-5! mini clamp that is compatible with the metal roof profile. Verify dimensions for proper fit. For further info please see: Clamps and Brackets.

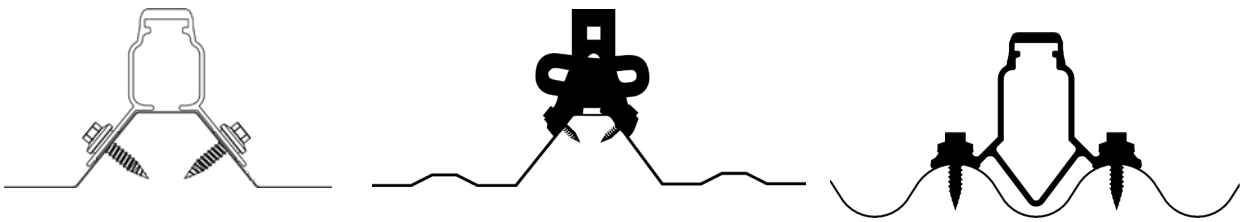

RibBracket™ comes in 5 different sizes and features flexible legs

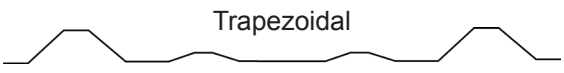

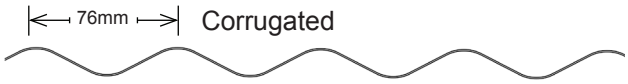

ROOF PROFILES

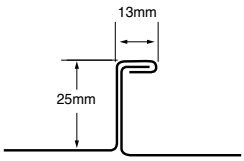

25mm Single Fold
S-5-S, S-5-S Mini

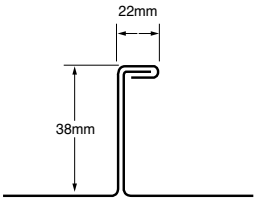

38mm Single Fold
S-5-S, S-5-S Mini

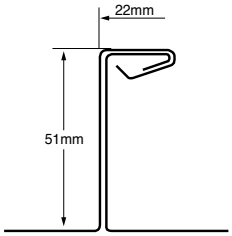

51mm Single Fold
S-5-H90, S-5-H90 Mini
S-5-U, S-5-U Mini
S-5-H, S-5-H Mini

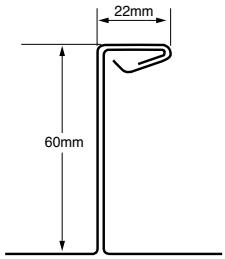

60mm Single Fold
S-5-H90, S-5-H90, Mini
S-5-U, S-5-U Mini
S-5-H, S-5-H Mini

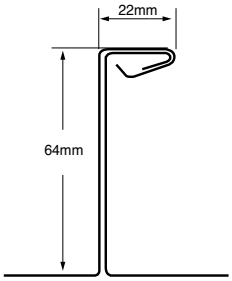

64mm Single Fold
S-5-H90, S-5-H90 Mini
S-5-U, S-5-U Mini
S-5-H, S-5-H Mini

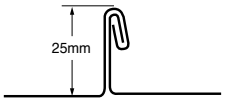

25mm Double Fold
S-5-E, S-5-E Mini

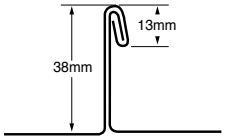

38mm Double Fold
S-5-E, S-5-E Mini

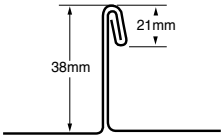

38mm Double Fold
S-5-V, S-5-V Mini
S-5-U, S-5-U Mini

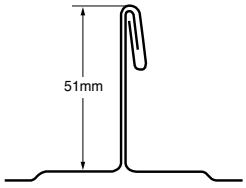

51mm Double Fold
S-5-V, S-5-V Mini
S-5-U, S-5-U Mini

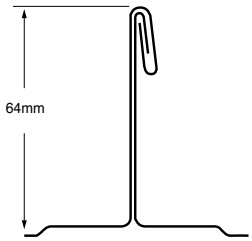

64mm Double Fold
S-5-V, S-5-V Mini
S-5-U, S-5-U Mini

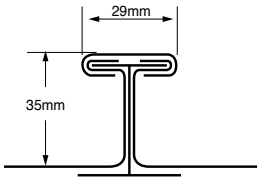

35mm T Seam
S-5-T, S-5-T Mini

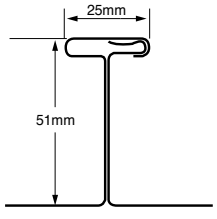

51mm T Seam
S-5-T, S-5-T Mini

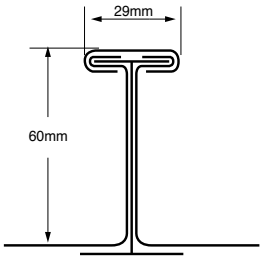

60mm T Seam
S-5-T, S-5-T Mini

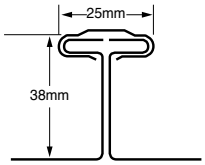

38mm Batten Cap T Seam
S-5-T, S-5-T Mini

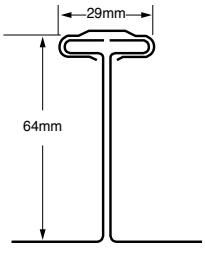

64mm Batten Cap T Seam
S-5-T, S-5-T Mini

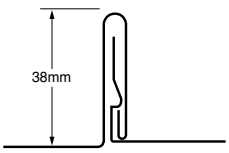

38mm Snap Seam
S-5-S, S-5-S Mini

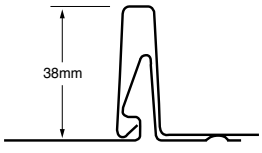

38mm Nail Strip
S-5-N 1.5, S-5-N 1.5 Mini

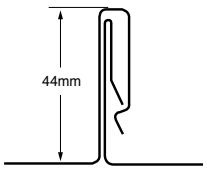

44mm Snap Lock
S-5-S, S-5-S Mini

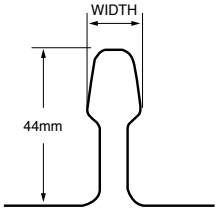

44mm Bulb Seam EU
S-5-Z, S-5-Z Mini
S-5-R465, S-5-R465 Mini
Clamp choice dependent on bulb width

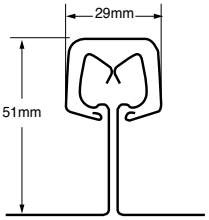

51mm Bulb Seam Cap
S-5-Q, S-5-Q Mini

ROOF PROFILES *continued*

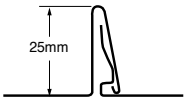

25mm Snap Seam
S-5-S, S-5-S Mini

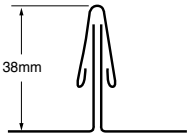

38mm Batten Cap
S-5-N, S-5-N Mini

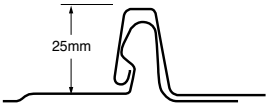

25mm Nail Strip
S-5-N, S-5-N Mini

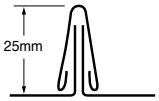

25mm Batten Cap
S-5-S, S-5-S Mini

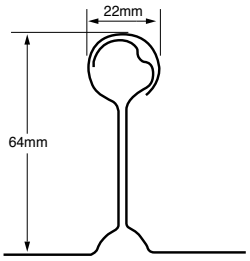

64mm Bulb Seam
S-5-Z, S-5-Z Mini
S-5-Q, S-5-Q Mini

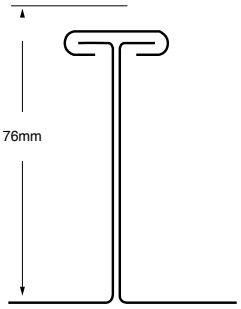

76mm Batten Cap T Seam
S-5-T, S-5-T Mini

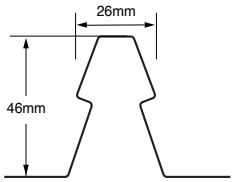

Conceal Fix Tall
S-5-HR

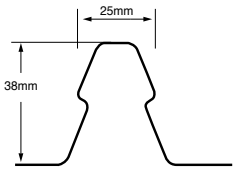

Conceal Fix Narrow
S-5-K Grip, S-5-K Grip Mini, S-5-K Grip Snow
The GX 10 insert is used on these profiles with K Grip clamps.

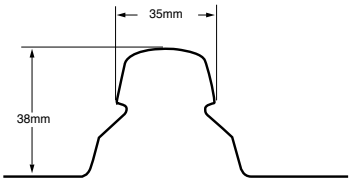

Conceal Fix Wide
S-5-K Grip, S-5-K Grip Mini, S-5-K Grip Snow
The GX 50 insert is used on these profiles with K Grip clamps.

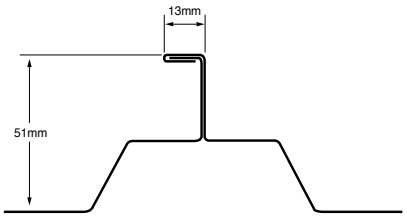

51mm Trap Single Fold
S-5-S, S-5-S Mini

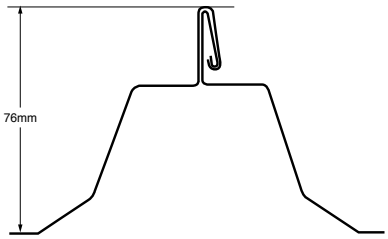

76mm Trap Snap Seam
S-5-V, S-5-V Mini
S-5-U, S-5-U Mini

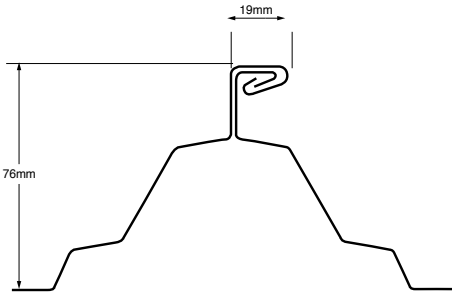

76mm Trap Single Fold
S-5-H90, S-5-H90 Mini
S-5-U, S-5-U Mini
S-5-H, S-5-H Mini

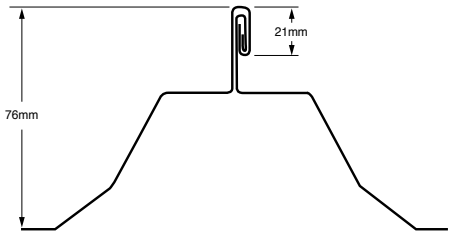

76mm Trap Double Fold
S-5-V, S-5-V Mini
S-5-U, S-5-U Mini

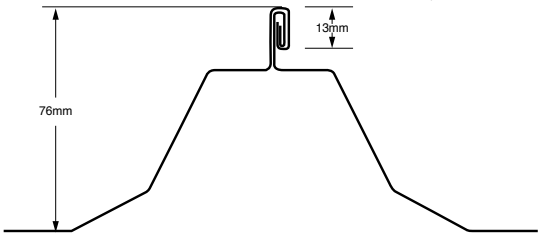

76mm Trap Double Fold
S-5-E, S-5-E Mini

REQUIRED ATTACHMENT QUANTITIES

There are two methods provided in AS/NZS 1170.2:2021 for determining design wind pressures. Either is appropriate to use as long as the building and array meet the conditions of the chosen calculation method.

2-Zone Method This method, provided in Clause B.6 Solar Panels of AS/NZS 1170.2:2021, is used for the calculation of wind loads on solar panels mounted parallel to inclined roofs. The roof is divided into end and central sections, across which the wind pressure varies. The following restrictions apply:

a. Panels attached to enclosed buildings with aspect ratios h/b ≤ 0.5 and h/d ≤ 0.5.
b. Maximum roof slope of 30˚
c. Panels be attached parallel to the roof plane
d. Panels with a gap of 50 mm to 300 mm between the underside of the panel and the roof
e. Panels with a minimum distance between panel and roof edge of 2s where s is the gap between the underside of the panel and the roof surface (roof edge includes ridges when pitch ≥ 10˚)

2-zone method wind zones

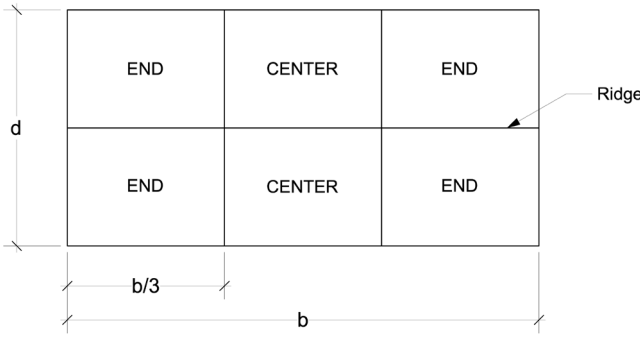

4-zone all roof slopes ≤ 10˚

4-Zone Method A more generalized components & cladding approach can be used when the above conditions are not met. This method can be found in Section 5.4 External Pressures for Enclosed Rectangular Buildings in AS/NZS 1170.2:2021. Here the roof is divided into corner, edges, and central zones. The array can be placed accordingly to avoid corners and outer edges when wind pressures are high.

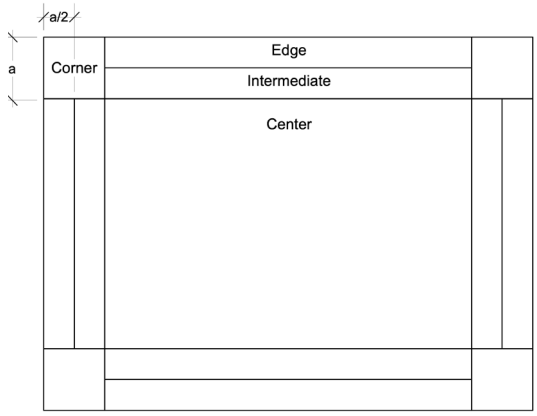

4-zone gable slopes > 10˚

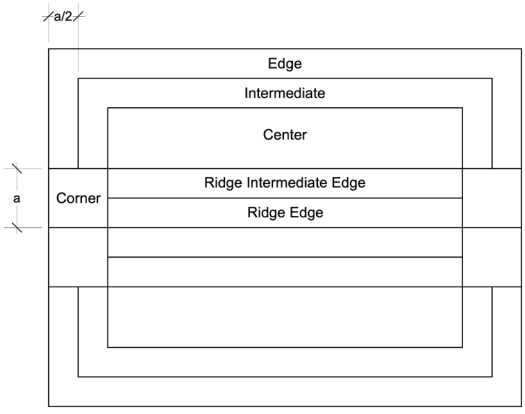

4-zone single slope > 10˚

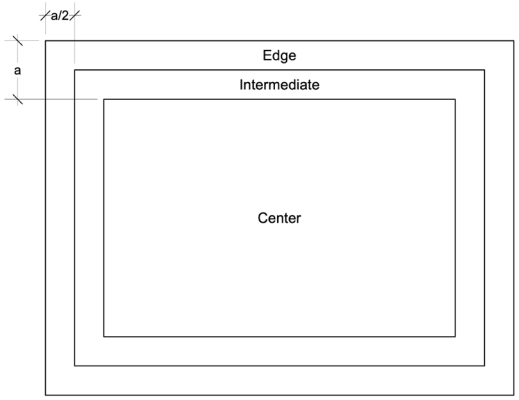

CLAMP COUNT & SPACING TABLES

S-5! provides certified tables to reference clamp counts when using the PVKIT or maximum spacing when designing a system to be mounted with rails. These tables are an interactive tool allowing the user certain inputs that dictate the values in the tables.

Parameters for use:

- Wind uplift loads to AS/NZS 1170.2:2021 (no downward loads or snow loads)
- 25-year design life
- Importance Level 2
- Probability of Recurrence 1/200
- Wind regions A0-5, B1, and B2
- All terrain categories
- Roof heights up to 20 m
- Shielding and topography multipliers, equal to 1.0
- PV mounted on roofs of enclosed buildings of nominal rectangular shape
- Module weight used in calculating design loads 10.2 kg/m^2
- Minimum of 4 clamps supporting each panel (PVKIT Installations)
- Roof structure to be checked and certified as suitable for applied rack loads prior to installation.
- Solar panels to be certified by manufacturer as able to resist wind loads in accordance with AS/NZS 1170.2:2021

A specific set of tables is provided for each S-5! Clamp or bracket and roof combination included. These tables can also be used for profiles that are dimensionally similar, and have the same material and thickness or thicker. If the roofing profile is not listed within this guide, please reference S-5!'s online load tables or consult S-5! for clamp suitability.

Clamp Models	Bracket Models
S-5-D Grip Mini w GXM 50 Insert	CorruBracket 500T PV
S-5-E Mini	RibBracket II
S-5-K Grip Mini w/ GXM 10 Insert	RibBracket IV
S-5-K Grip Mini w/ GXM 50 Insert	TrapBracket 2.0
S-5-S Mini	ProteaBracket AI
S-5-R 465 Mini	

For clamp or bracket models not included in the tables work with S-5! to use the certified AS/NZS 1170 design tool..

For access to the clamp count and spacing tables or assistance using the certified design tool, please contact support@S-5.com or call (888) 825-3432. Both certifications can be found in the appendix beginning on page 37.

SITE SPECIFIC CALCULATIONS

S-5!'s certified AS/NZS 1170 design tool allows for a more in-depth analysis specific to the situation at hand. Often times clamp counts can be reduced from what is found in the Clamp Count and Spacing Tables by performing calculations on a job specific basis. The tool follows all aspects of the 1170 codes as they pertain to flush mounted rooftop PV arrays. To meet conditions outside of the parameters for use of the tables or for clamp/bracket and roof combinations not listed, work with an S-5! applications engineer to use the AS/NZS 1170 certified design tool.

Expanded analysis:

- Input load test values specific to your roof
- Takes advantage of pressure coefficients specific to the building's characteristics
- Choose any design life, importance level, or probability of recurrence within the limitations of the standards
- All wind regions including C and D
- Roof heights > 20 m
- Directionality factor (analyze wind from each direction at the same time)
- Calculate for shielding buildings or features
- Account for increased pressures due to topographic features
- Sites located within Lee Zones (New Zealand only)
- Accounts for pressure changes with distance from roof edge in addition to changes across roof zones
- Calculates combined loading from wind and snow



PVKIT AND MODULE MOUNTING CONSIDERATIONS

To ready the project for layout and construction, the following three areas need to be examined:
1. The **MODULE**: thickness, acceptable mounting locations and allowable loading. **2.** The **METAL ROOF SYSTEM/ PROFILE:** for S-5! Mini clamp or standard clamp selection, bracket and roof attachment clip type. 3. The **LOCATION** of the roof attachment clips within the seam (when relevant).

THE MODULE

S-5! PVKIT and clamps are designed to fit most module frame thicknesses and metal roof types. The PVKIT Grabs accommodate module frame thicknesses from 30mm to 46mm, as shown to the right.

Hint: It is possible to use the PVKIT MidGrab Assembly in array-edge scenarios (rather than the EdgeGrab). The mechanism that prevents the grab from rotating away from the module is the same on either part.

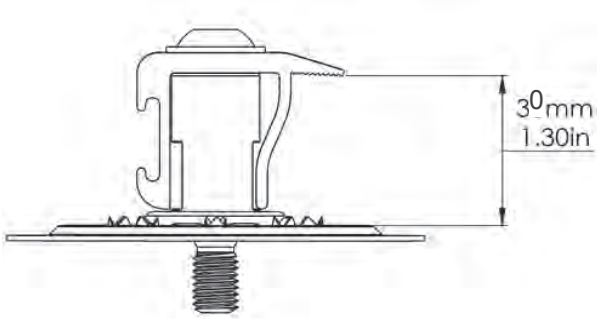

PVKIT Grab's Acceptable Module Thickness Range

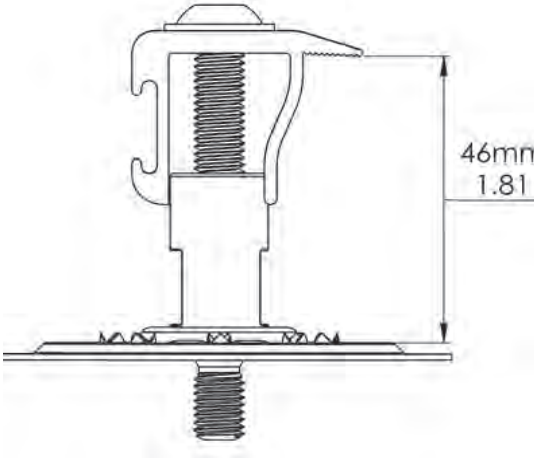

Mounting Locations

It is important to adhere to the module manufacturer's prescribed mounting zones. This will help ensure that the module performs under load to its rated limits and that the module manufacturer's warranty is preserved. These mounting zones establish maximum allowable spans and cantilevers. They will either extend from the corner of the module, a distance inward towards the module's center or they will be windows as shown in the figure below. During planning and installation, care should be taken to ensure the module spacing is such that a seam or rib of the roof lies beneath the module mounting zones.

Note: in some cases when it is not possible to attach the PVKIT within the module manufacturer's mounting zone, an additional PVKIT may be attached to shorten the frame's unsupported span or cantilever. Seek approval from the module manufacturer before proceeding.

After design loads have been calculated via AS/NZS 1170 ensure they are within the allowable loads for the module.

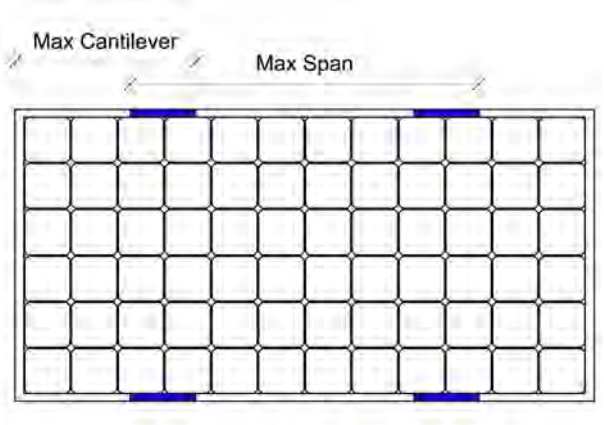

CLAMP SPACING CONSIDERATIONS



The metal roof panels are attached to the building via concealed roof clips within the metal roof's seam areas. Acceptable clamping locations for the S-5! Mini clamps are dependent on the type of roof clip used. Once the brand of metal roof system is determined, the roof clip is implied. Use the installer, manufacturer and/or materials invoice to confirm specifications and fitment.

The key to frequency and spacing of attachment points for PV is to distribute loads to the standing seam metal panels in a manner that is consistent with the intended distribution of loads from the roof panels into the building structure. Often the "weak link" is not the S-5! clamp, but the standing seam metal roof clips that secure the metal panels to the building structure or the beam strength of the roof panel seam itself. **Load capacities of all the S-5! clamps have been tested and are published on www.S-5.com.** Here you will find testing values that are specific to the standing seam roof manufacturer, standing seam type, material type/thickness and load orientation.

Standing seam metal roof panel attachment to a building structure is accomplished with clips hidden within the seams. The most conservative method to distribute the load into the roof panels is to determine the frequency of the roof's attachment to the structure, and then duplicate or exceed it with the attachment of the PV components to the roof. Determining panel attachment spacing in one axis is very simple: Standing seam panels' attachment will be made using concealed hold-down clips within the seam area of the panel. So, in that axis, the clip spacing is the same as the seam spacing.

The location of the clips along the seam (in the other axis) can be determined by the following: a) consultation with the roof system manufacturer or installer; b) checking from the underside; or c) close examination from the topside along the seam. There will usually be a slight deformation of the seam at the clip location visible from the roof's topside.

If the panel clips are spaced, for instance, 1.5 m on center along the seam, then use the 1.5 m dimension as a maximum spacing for the S-5! clamps. (S-5! clamps may also be spaced at closer centers but not wider.) When modules are direct attached (without racking) in the landscape orientation, this spacing dimension is dictated by the smallest dimension of the PV frame. Using the roof panel clip spacing as a maximum spacing template for S-5! clamps is sound practice, whether the PV modules are direct-attached or attached to a racking system, which is in turn attached to the S-5! clamp (and to the panel seams). To evenly distribute loads, it is also necessary for each seam be included in the finished assembly. Thus, every time a seam is traversed, it should be attached. Such an attachment scheme should evenly distribute wind loads into the building structure through the panels and their attachment, as was intended in the original roof construction assembly. "Skipping" seams with clamp attachment is common practice and may also be acceptable, but only when approved by a design professional.

Note: Wind dynamics are complex, and S-5! advises review by a qualified licensed professional who understands wind effects and metal roof design and construction.

ROOF CLIPS

DUAL COMPONENT ROOF CLIPS

In a dual component roof clip system, the top component is attached to the metal roof panel via the seam, and the bottom component is attached to the building structure. In order to accommodate differential movement presented during thermal cycling, the two roof clip components are joined with a slip joint.

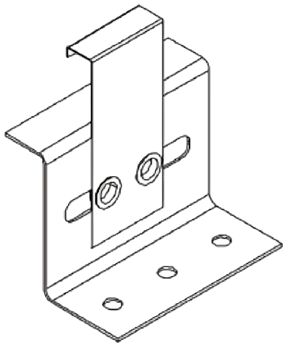

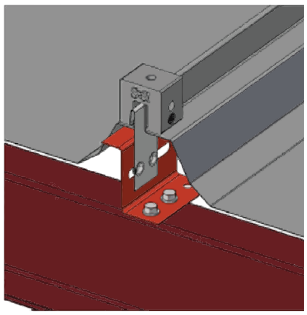

When attaching to this type of standing seam metal roof, the S-5! clamp can be attached at a roof clip location or between clips.
In a single component roof clip or halter system, the

Note: When using a clamp on a dual component roof clip, it is important that the setscrew of the clamp only engages the top portion of the clip.

SINGLE COMPONENT ROOF CLIPS OR HALTERS

metal roof panel can slide freely along the roof clip – accommodating any differential movement presented during thermal cycling.
When attaching to this type of standing seam metal roof, the S-5! clamp must be clear of the roof clip by a minimum of 50mm to allow for thermal expansion/ contraction movement. An exception may be permissible when the metal roof panel is 6.1m or less, or when approved by the metal roofing system manufacturer.

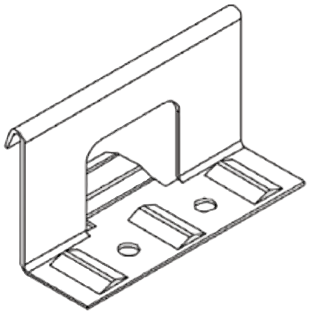

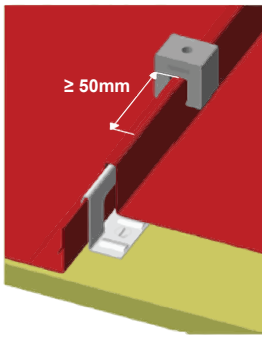

Concealed fix roof clips are another style of single component clips. They are used to attach KLIP-LOK style roofs to the building structure. The S-5! clamp for this roof style can be attached at a roof clip location or between clips. The nature of the attachment method does not inhibit thermal movement between the metal roof panel and the clips.

LOCATE THE ROOF CLIPS

Locating roof clips can be accomplished in three ways:
1) consulting with the roofing system manufacturer or installer,
2) inspecting the underside of the roof or
3) close examination of the top side of the roof.

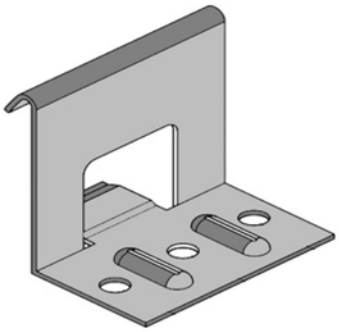

When examining the clip locations from the underside, look for fasteners. Inspect the structural purlins to which the panel clips are attached from the roof underside (interior of the building).

When examining the clip location from the topside, look for slight deformations of the seam – these will be the clip locations. Now that the type and locations of the roof clips are known, we can better understand the allowable clamping locations for the S-5! clamps (per roof clip type).

LAYOUT



The first step in designing the system layout is to map the total usable area for solar array. Drawing the total roof area and subtract the following areas:

Required setbacks and pathways.

Roof zone restrictions per wind loading.

Required space around any roof obstruction (e.g. skylights, etc.).

Any locations deemed not structurally sound or inappropriate for installation.

The next step is to map the standing seams and the roof clips, as identified in the last section. Then, identify the areas on the seams that are appropriate for attaching the S-5! PVKIT/Clamp, per the previous section. Finally, map the module placement. Keep in mind, the module manufacturer's attachment location, span, and cantilever restrictions. Modules in landscape orientation will generally allow for the most flexibility in design.

GAP MANAGEMENT

Modules in the north/south direction will have a uniform gap of 28mm between each module provided by the PVKIT 2.0 MidGrab. With these module columns, it is also advised to add a 100mm gap within a column after a maximum of 10 module sets.

The module gap in the east/west direction will be managed by the designer. For aesthetic reasons, the designer may choose to have a minimal gap, uniform gap or a gap wide enough to accommodate a walk space. However, due to thermal cycling concerns, a minimal gap of 6mm between module columns is suggested.

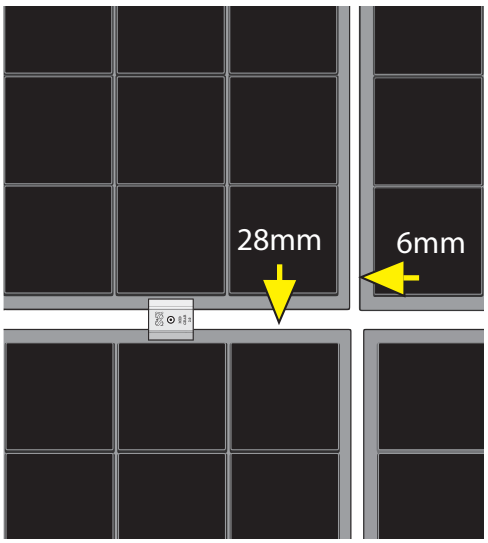

INSTALLATION OF PVKIT WITH CLAMP

S-5! clamps attach to the panel seam by tightening the “bullet-nosed” stainless-steel setscrews against the seam material. The setscrews compress the seam material against the opposite wall of the clamp. They will “dimple” the seam material but will not penetrate it. Threaded holes in the clamp and the stainless-steel hardware are used to attach the S-5-PVKIT to the clamp.

Mini Clamp Installation

Mini Clamp Overview:

What follows are basic installation instructions for S-5! mini clamps. Clamp specific instructions can be found on the S-5! website at **https://s-5.com** or in the S-5! Resource Center at **https://s-5.com/metal-roof-resources**.

Install the Clamp:

1. Partially thread the round-point setscrew into the side of the clamp manually.
2. Position clamp at desired location along seam. Ensure that the clamp setscrew will engage the proper side of the seam. (See install instructions provided with clamps.) Tighten clamp onto the seam, ensuring a snug and square fit. Clamp must be seated on the profile so that the setscrew is in the correct position to make adequate purchase of the seam.
3. Finally, tighten the setscrew on the side of the clamp to the specified torque range.

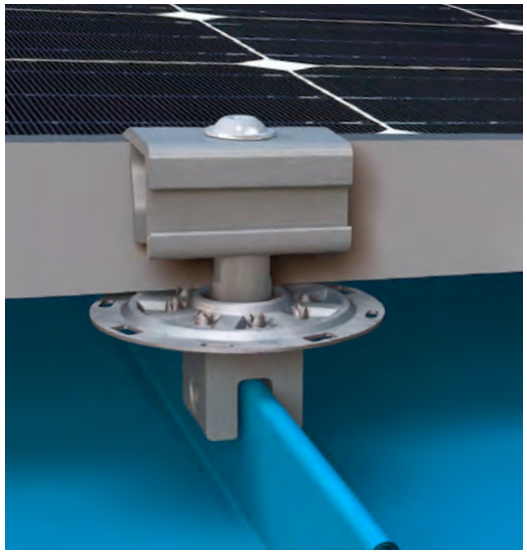

PV DISK

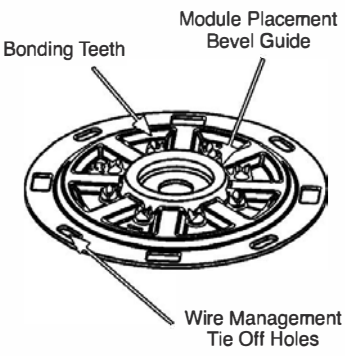

EdgeGrab/StandOff Assembly

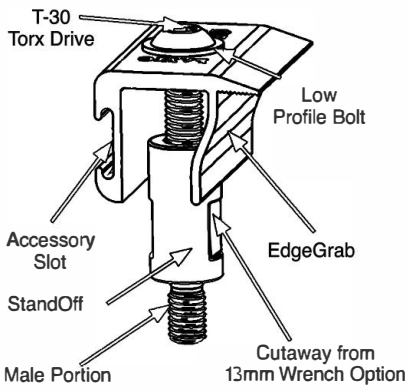

MidGrab/StandOff Assembly

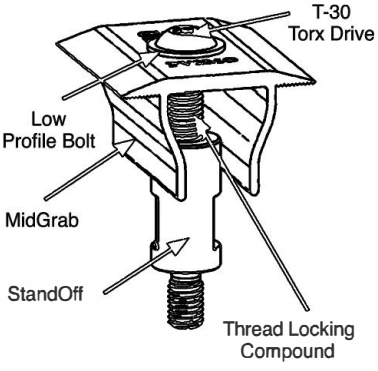

PVKIT INSTALLATION

Step 1: Preload setscrews

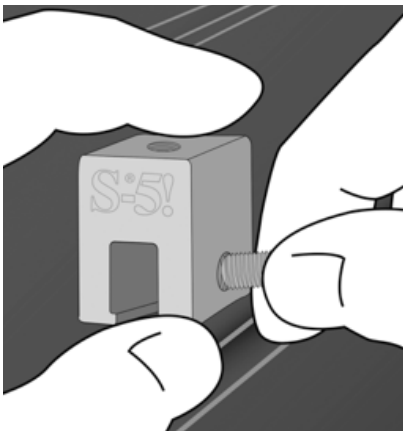

Step 2: Position clamp on seam

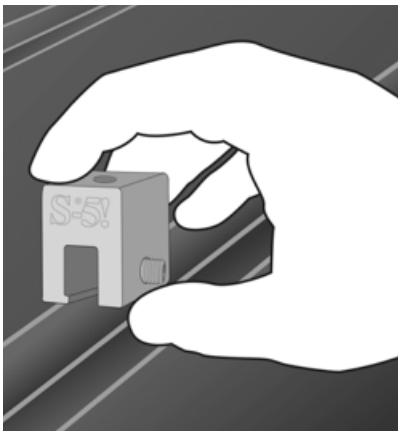

Step 3: Tighten to correct torque

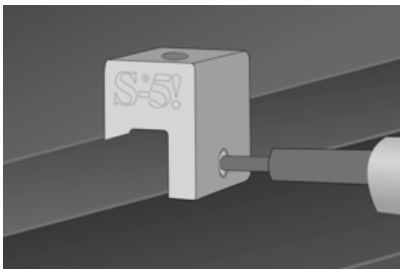

Note: Should clamp sit crooked on seam, lift clamp to a position on the seam where the fold of the roof fully engages the lip on the clamp; then tighten setscrew.

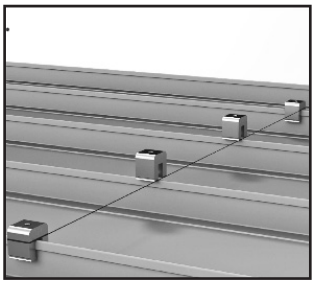

Figure 1

1. Install the first row of S-5! clamps, at the edge of the array: It is critical for this row to be straight. Install a clamp at both ends of the row by measuring from a reference point, such as the eave of the roof. Tighten the setscrews with Screw Gun and the included Bit Tip. The setscrews will dimple the seam material but will not penetrate it. When relying on published load values, setscrew tension should be verified periodically using a calibrated torque wrench to ensure the tool is consistently achieving the proper torque range (see Setscrew Torque Table below). Please see installation instructions provided with clamps for specifics. Stretch a string line between the two end clamps to provide a true line to mount the remaining edge clamps (Fig. 1).

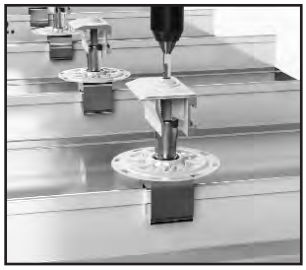

Figure 2

2. Mount the PV Disks and the EdgeGrab/StandOff Assembly to the first row of clamps: Place the PV Disk atop the clamp and thread the Male Portion of the StandOff through the disk and into the clamp. Drive the EdgeGrab/StandOff Assembly down with provided Bit Tip (Fig. 2) until the base of the StandOff seats the disk in place and breaks the thread locking seal between the StandOff and Low Profile Bolt. Leave the grab up, to allow space for a module frame. A 13mm open-end wrench can be used to further tighten the StandOff atop the disk if desired.

Specified Torque	Inch Pounds	Foot Pounds	Nm
Setscrew on 22ga (0.8 mm) steel	160-180	13-15	18-20
Setscrew on 24ga (0.6 mm) steel and all other materials	130-150	11-12.5	15-17
M8 Hex Flange bolt	160	13	18

PVKIT INSTALLATION CONTINUED

3. Install the first row of modules (Fig 3a): Place the first module in the grabs, pushing on the frame to seat the module against the EdgeGrabs and Module Placement Bevel Guide (Fig 3b-3c). Drive the Low-Profile Bolt with the provided bit to tighten the grabs. The Low-Profile Bolt and Standoff should be torqued to 13.6-14.7 Nm (120-130 in lbs). Check torque periodically during install to ensure the tool is achieving torque. PVKIT 2.0 fits module frame thicknesses from 30 mm-46 mm. The grab's Low-Profile Bolt and Standoff should be torqued to 13.6-14.7 Nm (120-130 inch-pounds). Check torque periodically with a torque wrench.

4. Install MidGrab/StandOff Assembly & PV Disk on Clamps: The PV Disk and MidGrab/StandOff Assembly should be mounted to the clamps before mounting the clamps to the roof. Place the PV Disk atop the clamp and thread the male portion of the StandOff through the disk and into the clamp. Drive the MidGrab/StandOff Assembly down with the provided bit tip (Fig 4) in similar fashion to Step 2. Note: When using the S-5-H90 or S-5-K Grip style clamps, the clamp must be secured to the roof prior to fixing the S-5-PVKIT 2.0 EdgeGrab or MidGrab assembly to clamps. See: Tips for Mounting with CorruBrackets, S-5-H90 or S-5 K Grip style clamps on the next page.

5. Place MidGrab/StandOff/Disk & Clamp Assemblies: Using the PV module as a guide, place the throat of the clamp over the seam and slide the assembly into place so the edge of the module is seated against the wall of the MidGrab and the Module Placement Bevel Guide, similar to (Fig 3b). Tighten the setscrew(s) of the clamp as described in step 1. The grabs should be left in the partially open position to accommodate the next row of modules before final tightening.

6. Install Additional PV Modules-repeating steps 3-5: Place another module in the MidGrabs left open from the previous step. Tighten the downslope row of grabs each time a module is placed and leave the upslope open until the next module is placed (Fig. 6). The final row will be finished with EdgeGrab/StandOff Assemblies. Periodically look back at the modules you've installed to double check that the MidGrabs were tightened.

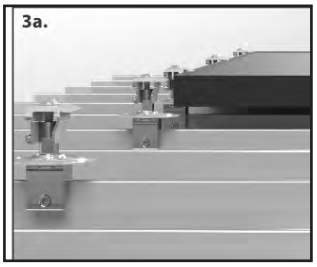

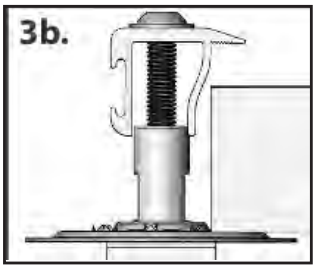

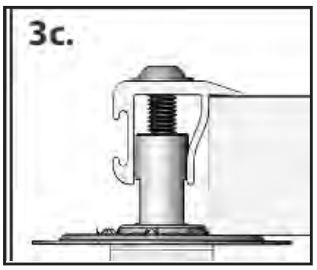



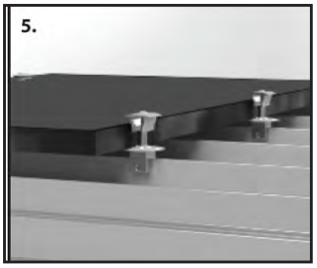

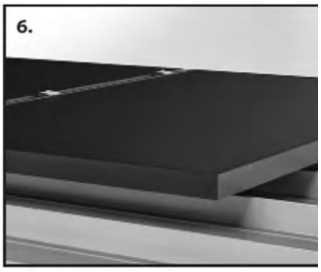

TIPS FOR MOUNTING WITH CORRUBRACKETS, S-5-H90/H90 MINI, S-5-K GRIP/K GRIP MINI

When mounting with any S-5! CorruBracket, S-5-H90 or S-5-K Grip style clamps, steps 4/5 will vary slightly. The fasteners for a clamp or bracket to the roof must be installed before the PV Disk is mounted atop the clamp/bracket. The module can still be used as a spacer to place the clamps/brackets. Prepare a clamp or bracket with the full MidGrab/StandOff Assembly & PV Disk mounted atop it. Place this assembly so that the inside of the Midgrab and the Module Placement Bevel Guide on the PV Disk rest against the edge of the module seating it in place as described in step 5 and shown in Fig 3b. Use a marker (do not use graphite pencil) to mark the location of the clamp or bracket on the roof. Now remove the preassembled clamp/bracket and PVKIT 2.0, and mount a clamp or bracket without the PVKIT on the mark you made. After fastening the clamp or bracket in place, the MidGrab/StandOff Assembly & PV Disk can be mounted atop it. The slotted hole atop the bracket allows the kit to be slid out of the way as the module is placed, then pushed into place against the edge of the module and tightened.

REMOVAL/O&M OF PVKIT SYSTEM & CLAMP

1. To remove, reverse the installation instructions.
2. The Standoff has a flattened area for a wrench to fit and assist with removal.
3. When re-installing, it is advised to use all new parts.
4. This is especially true for the mounting disk (due to the integrated grounding) and the clamp if it has been removed from the seam.
5. Any loose components or fasteners shall be retightened in accordance with these instructions.
6. Any components showing sign of damage that compromise safety shall be replaced immediately.

TECHNICAL SUPPORT

For questions regarding the installation of the PVKIT and EdgeGrab, please contact support@S-5.com or call (888) 825-3432.

PV RAIL OR TILTED RACK ATTACHMENT

PV rails can be installed directly to the S-5!® clamp/bracket, or with use of a flanged strap or 'L' foot. The rail should be installed perpendicular to the roof panel rib following the rail producer's recommended installation practices. Support rails must have sufficient flexural strength to carry possible load conditions. Support rails must also be adequately attached to the S-5! clamp, and the building structure must be sufficient to carry these loads. The makers of S-5! clamps make no representations with respect to these variables. It is the responsibility of the user to verify this information, or seek assistance from a qualified design professional, if necessary.

FLUSH MOUNTED RAILS

MODULES PARALLEL TO ROOF PLANE

Rails mounted perpendicular to the roof sheeting flush to the roof slope, with modules attached to rails parallel to the roof plane.

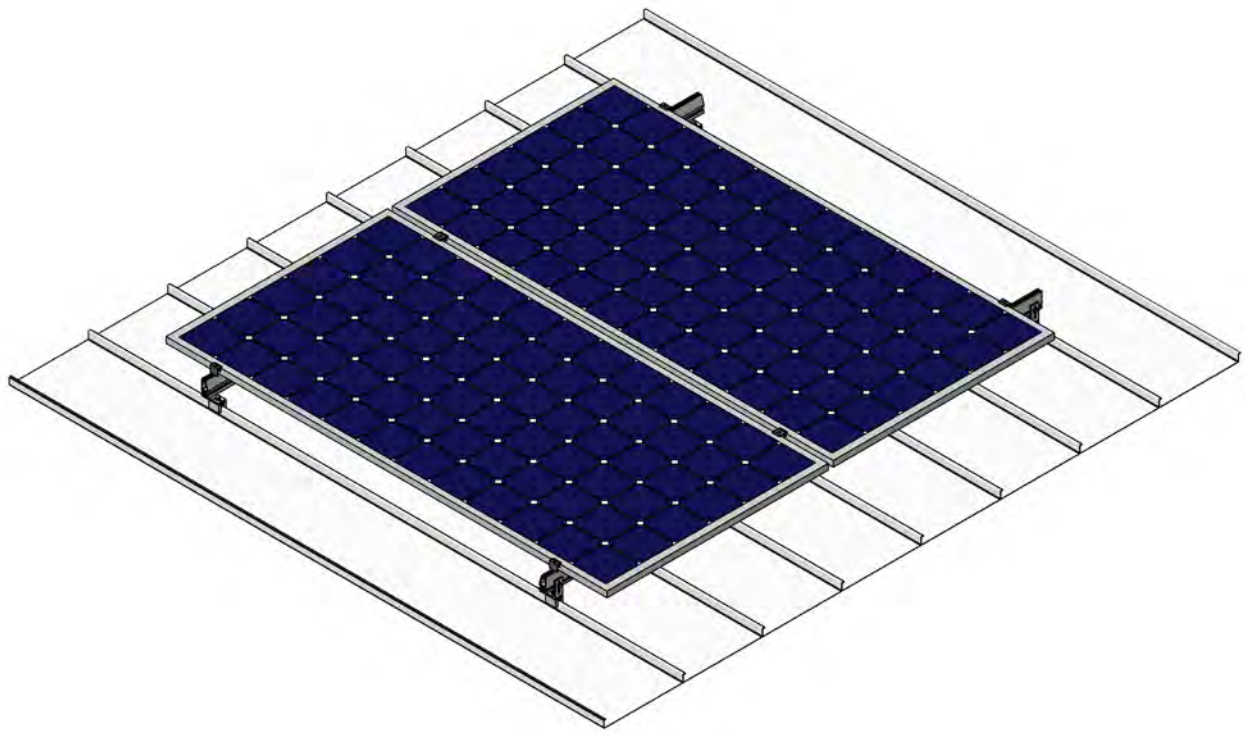

MODULE TILT PARALLEL TO ROOF PLANE

Rails mounted perpendicular to the roof sheeting flush to roof slope, with modules attached to rails tilted parallel to the roof plane.

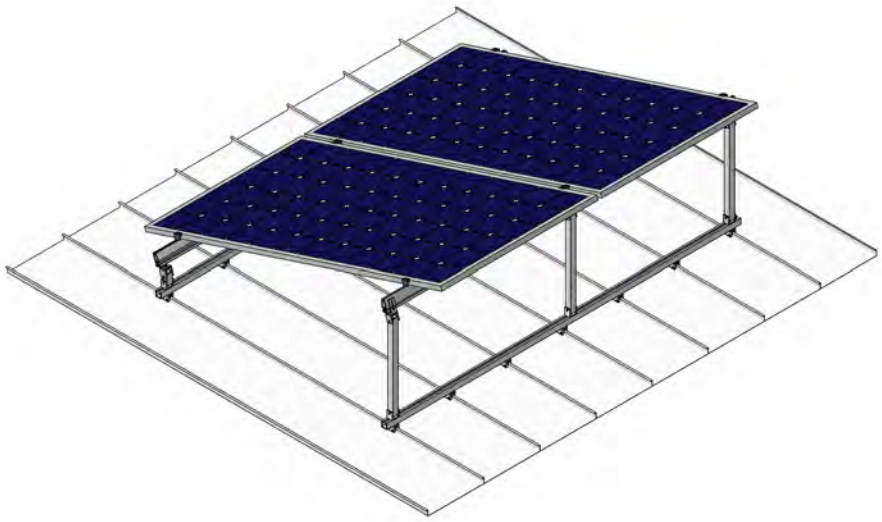

MODULE TILT PERPENDICULAR TO ROOF PLANE

Rails mounted perpendicular to the roof sheeting flush to roof slope, with modules attached to rails tilted perpendicular to the roof plane.



Caution: when tilting a PV array, a new and different airfoil is created, which may introduce loads for which the roof was not engineered. These new wind dynamics result in both positive and negative point loads that will need to be supported by the roof panels and structure.

REFERENCES

2.1

PVKIT COMPONENTS, CLAMP, & BRACKET SPECIFICATIONS

(MATERIAL PROP, STRUCTURAL PROP, TORQUES, ETC.)

2.1.1 Clamp Specifications

Clamp	
Model Numbers:	S-5-U Mini, S-5-U, S-5-S Mini, S-5-S, S-5-T Mini, S-5-T, S-5-Z Mini, S-5-Z, S-5-ZH Mini, S-5-ZH, S-5-K Grip Mini, S-5-K Grip, S-5-D Grip, S-5-R465 Mini, S-5-R465, S-5-Q Mini, S-5-Q, S-5-H Mini, S-5-H, S-5-MX Mini, S-5-MX, S-5-N Mini, S-5-N, S-5-N 1.5 Mini, S-5-N 1.5, S-5-NH 1.5 Mini, S-5-NH 1.5, S-5-E Mini, S-5-E, S-5-V Mini, S-5-V, S-5-H90 Mini, and S-5-H90, S-5-HR, S-5-RC, S-5-K700
Material:	6061-T6 Aluminum
Manufacturer Process: Extrusions Aluminum Castings	AA Aluminum Standards and Data ASTM B221 ASTM B85

Associated Hardware	Round Point Setscrews, T-30 Torx Drive
Material:	300 series stainless steel, 18-8 alloy
Dimensions:	3/8”-24 x 23mm or 3/8”-24 x 13mm
Drive:	T-30 Torx

Associated Hardware	Attachment Bolts (Only Provided with Standard Sized Clamps)
Material:	300 series stainless steel, 18-8 alloy
Dimensions:	8mm diameter, 1.25 thread pitch
Drive:	13mm hex flange head

REFERENCES CONTINUED

2.1.2 Bracket Specifications

Bracket	
Model Numbers:	CorruBracket 500T, CorruBracket 500T PV, RibBracket I-V, ProteaBracket, Protea II, Protea PV, TD Bracket, Trap-Bracket 2.0, SolarFoot, VersaBracket, VersaGard
Material:	6005A-T61 Aluminum
Manufacturer Process: Extrusions Aluminum Castings	AA Aluminum Standards and Data ASTM B221 ASTM B85

Associated Hardware	Fasteners
Sheet Screw:	1/4-14 X 25mm self-piercing fastener with stainless cap head
Metal to Wood Fastener:	1/4-14 TYPE 17-AB MILLED POINT - 3/8 HWH W/ ZAC CAP
Metal to Metal Fastener:	12-14 X 51mm ZAC SELF DRILL 3/8”

Associated Hardware	Attachment Nuts & Bolts
Material:	300 series stainless steel, 18-8 alloy
Dimensions:	8mm diameter, 1.25 thread pitch
Drive:	13mm hex flange head

2.1.3 PVKIT Component Specifications

MidGrab & EdgeGrab	
Model Numbers:	PV MidGrab PV EdgeGrab
Material:	6005A T-61 Aluminum
Manufacturer Process: Extrusions Aluminum Castings	AA Aluminum Standards and Data ASTM B221 ASTM B85

Associated Hardware	Standoff
Material:	300 series stainless steel
Dimensions:	M8-1.25 female thread with M8-1.25 male thread
Finish:	Mill

REFERENCES CONTINUED

Associated Hardware	Stainless Steel Flanged Button Head Screw
Material:	300 series stainless steel
Dimensions:	M8-1.25 x 30 mm
Finish:	Mill
Drive:	T-30 Torx

Associated Hardware	3” Mounting Disk
Material:	300 series stainless steel
Dimensions:	76mm O.D. / 8mm I.D. x 0.9mm thick
Finish:	Mill

All Manufacturing Processes for S-5! Performed in ISO 9001 Certified Facilities

All Metallurgical and Mechanical Testing Performed in ISO 17025 Certified Laboratories

2.1.4 Metallurgical Compatibility

The metals/finishes below are considered NON-CORROSIVE when combined with mill finish or anodized aluminum

Galvanized steel (painted or unpainted)
Aluminum (painted, bare or anodized)
Stainless Steel
Galvalume® Steel
Zincalume® Steel
Zincalume® Plus
Acrylume®, Galvalume® Plus
Galfan®
Galvanneal steel
Titanium-Zinc (VM, Rheinzink, Nedzink, Prozink)

HINT: Some examples of incompatible metals common to the trade are:

Exposed copper wire or copper conduit in direct contact with materials such as aluminum and aluminum alloys, galvanized steel, Galvalume® or other Al-Zn roofing coatings. Graphite in direct contact with aluminum and aluminum alloys, Galvalume® or other Al-Zn roofing coatings.

REFERENCES CONTINUED

2.1.5 Torque

When relying upon published load values, setscrew tension should be periodically verified using a calibrated torque wrench between 18-20Nm (160-180 inch pounds) when used on 0.8mm steel or thicker, or between 15-17 Nm (130-150 inch pounds) on 0.6mm or thinner steel and all other metals. The standing seam of a metal roof is a soft joint which involves compressible materials and/or open space. For this reason, a dial-indicating torque wrench is RECOMMENDED to verify full clamping force has been achieved (adjustable click type torque wrenches are NOT RECOMMENDED).



Please visit our load test table at: **https://www.s-5.com/load-tests/** to determine allowable and ultimate clamp holding strength.

ROUND POINT SETSCREW TORQUE SPECIFICATIONS

	Fastener	Torque			
		Newton Meters		Inch Pounds	Foot Pounds
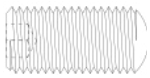	3/8-24 x 23mm Round Point Setscrew	≤ 0.6mm	15-17	130-150	11-13
		≥ 0.8mm	18-20	160-180	13-15
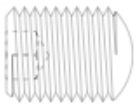	3/8-24 x 13mm Round Point Setscrew	≤ 0.6mm	15-17	130-150	11-13
		≥ 0.8mm	18-20	160-180	13-15

S-5-PVKIT 2.0 & EDGEGRAB HARDWARE TORQUE SPECIFICATIONS

	Fastener	Torque		
		Newton Meters	Inch Pounds	Foot Pounds
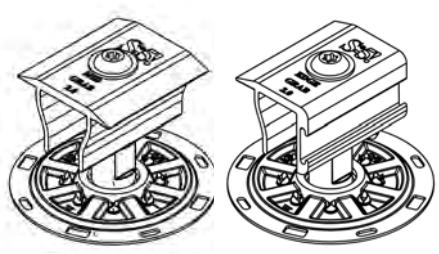	MidGrab/StandOff and EdgeGrab/ StandOff Assembly	13.6-14.7	120-130	10-11

CODES AND STANDARDS

- AS/NZS 1170.0:2002 (Including Amendment Nos 1, 2, 4, and 5) Structural Design Actions Part 0: General Principals
- AS/NZS 1170.2:2021 Structural Design Actions Part 2: Wind Actions
- AS/NZS 1170.3:2003 (Incorporating Amendment Nos 1 and 2) Structural Design Actions Part 3: Snow and Ice Actions
- AS/NZS 5033:2021 Installation and safety requirements for photovoltaic (PV) arrays
- Aluminum Standards and Data, 2003 Edition; Aluminum Association (AA) (www.aluminum.org)
- ASTM B85-03 - Standard Specification for Aluminum-Alloy Die Castings.
- ASTM B221-04a - Standard Specification for Aluminum and Aluminum-Alloy Extruded Bars, Rods, Wire, Profiles, and Tubes.
- ASTM E527-83 (2003) - Standard Practice for Numbering Metals and Alloys



EARTHING INFO & PATH FOR PVKIT

AS/NZS 5033:2021- The earthing or bonding connections shall be arranged so that the removal of one or more PV modules will not affect the continuity of the earthing or bonding connections to any other module.

When using the PVKIT, module frames within a column are bonded through the disk of the PVKIT. The disk features abrasive spikes that penetrate the PV module frame's anodization. A lug attached to the module frame is used to continue the path to earth.

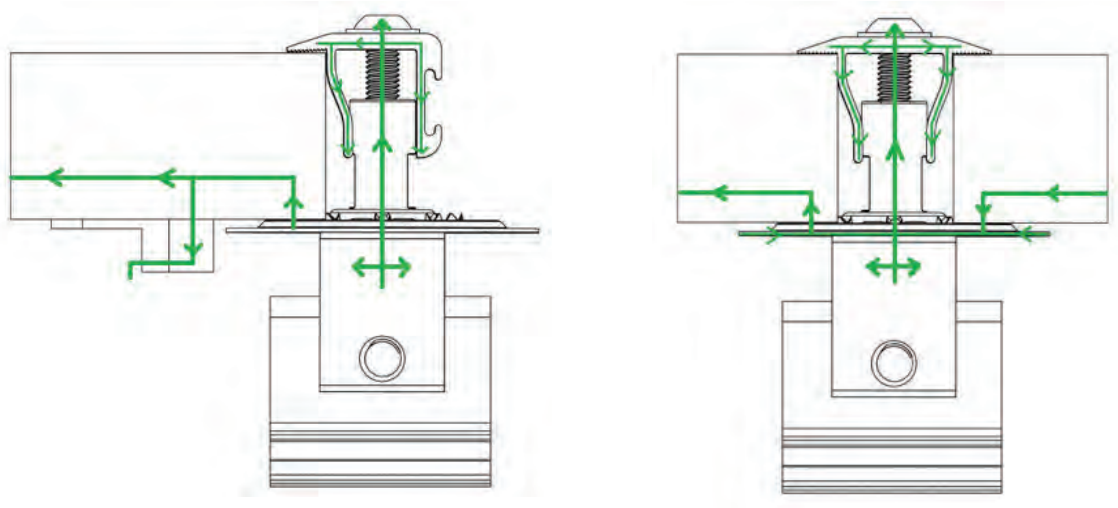

The earthing connection across the gaps between columns can be accomplished by using a Rayvolt® earthing clip to route earth cable around the perimeter of the array. A clip is attached to a module frame each time a module is traversed. The earthing cable passes through each clip continuously. If a module is removed the clip is simply disengaged from the frame and the earthing continuity is uninterrupted.



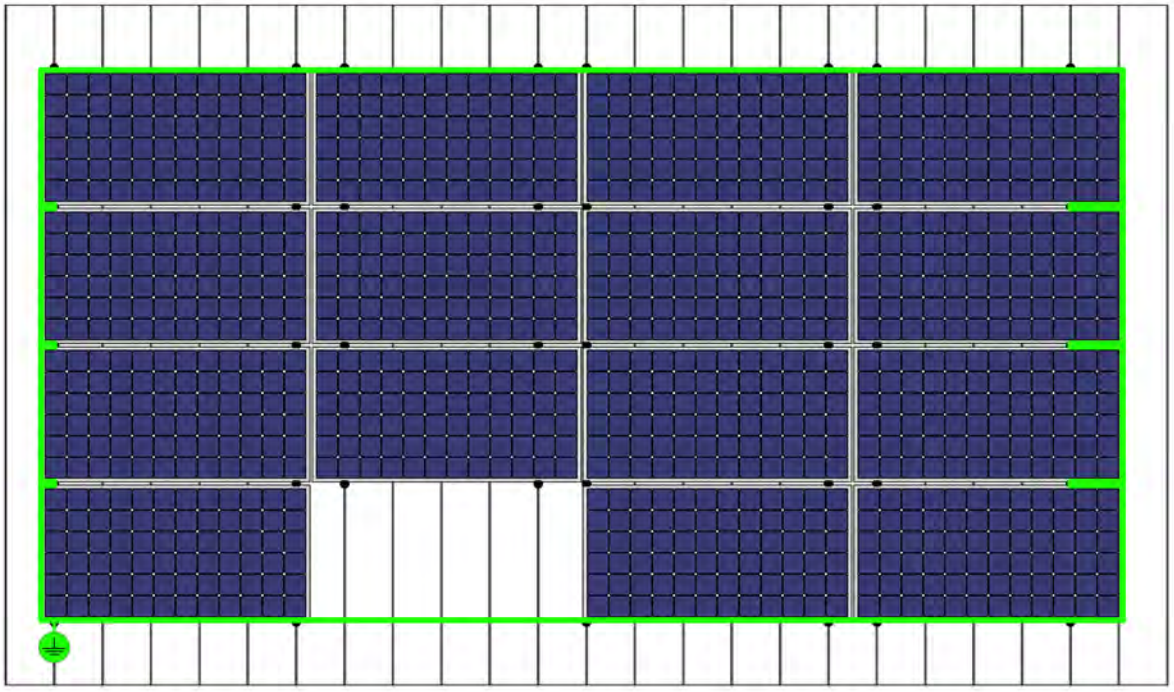

The diagram above shows the continuous earthing path around the perimeter of the array with Rayvolt earthing clip and earthing cable. The PVKITs provide the continuity along columns and through module frames in the center of the array. Removal of a module does not interrupt the cable along the perimeter.

Below, an additional module is removed along the side of the array. The earthing path is continued along the module frames and through PVKITs.

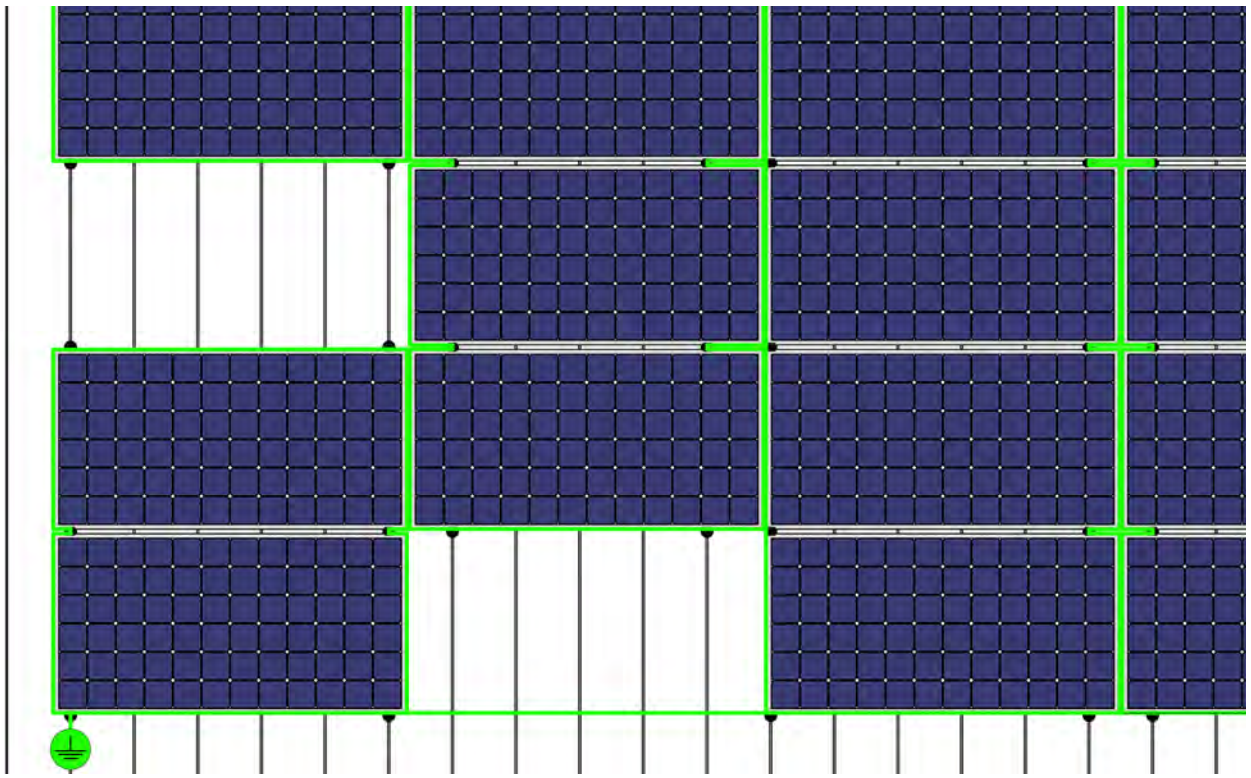

A bonding jumper or an earthing lug and earth cable can also be used to connect adjacent columns of modules. The earthing lug should be secured to the PV module frame in accordance with manufacturer's installation instructions. In order to maintain a continuous earthing path should a module be removed, it is necessary to use an earthing lug and earth cable at each end of the column of modules as illustrated below. If a lug and cable is not utilized at each end of a column of modules, or when a module at the end of a column is removed, a temporary earthing lug and cable must be used to connect modules at the location of the removed module.

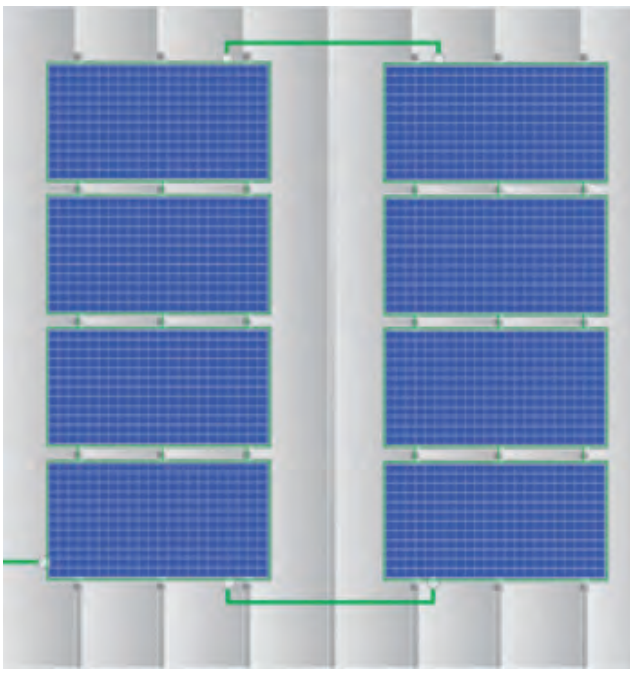

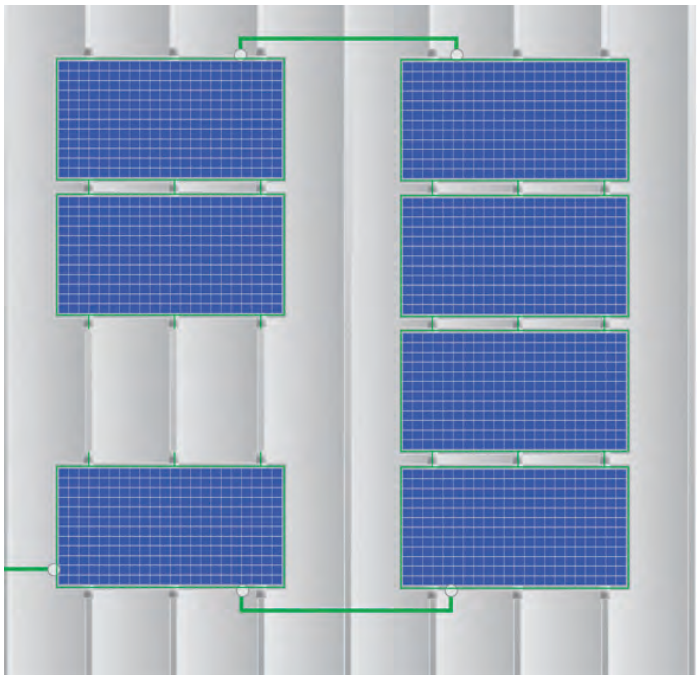

HINT: Improve install time and achieve an easy earthing path with bonding jumpers. They are clipped to the underside of the module frame to electrically bond columns of the PV array.

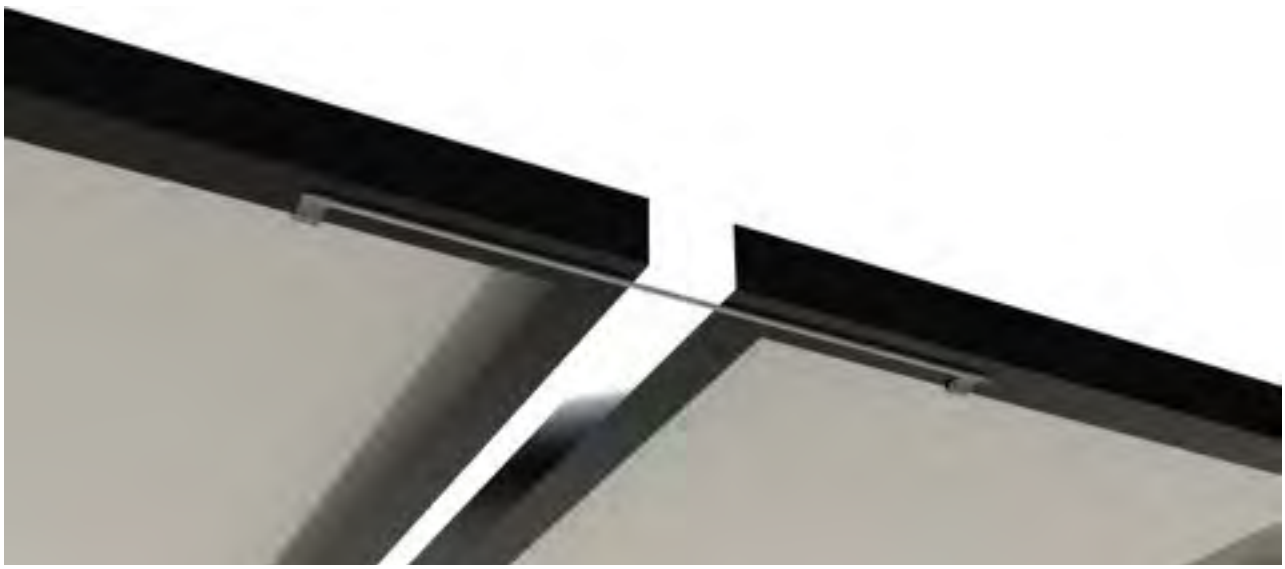

2.4 BASIC ENGINEERING DRAWINGS

2.4.1 PVKIT Component Drawings

PV 2.0 EdgeGrab

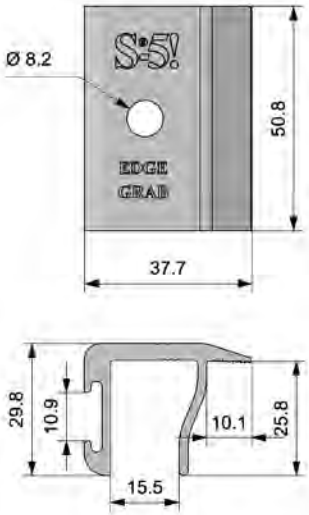

PV 2.0 MidGrab

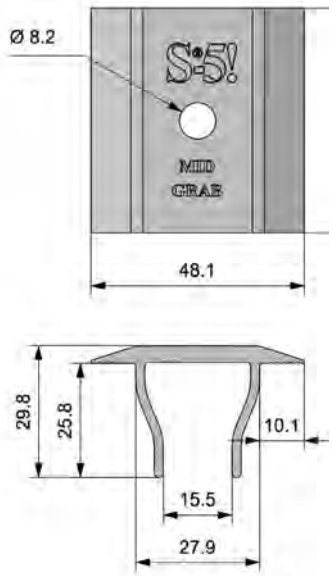

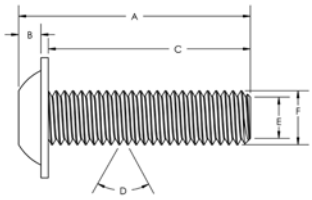

M8-1.25x26mm SS Flanged Button Head Screw 300 Series Stainless Steel Bolt for PVKIT Assembly											
UNIT	A	B	C	D	E	F	G	H	I	J	K
INCH	1.20	.13	1.02	65.8°	Ø.25	Ø.31	.23	.20	Ø.70	Ø.55	Ø.31
MM	30.4	3.3	26.0	65.8°	Ø6.4	Ø8.0	5.8	5.0	Ø17.8	Ø14.0	Ø8.0

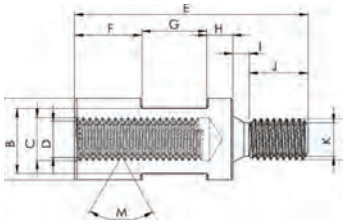

StandOff 300 Series Stainless Steel													
UNIT	A	B	C	D	E	F	G	H	I	J	K	L	M
INCH	Ø.62	Ø.50	Ø.33	Ø.28	1.8	.52	.50	.20	.13	.45	Ø.26	Ø.31	65.8°
MM	Ø15.7	Ø12.7	Ø8.4	Ø7.1	45.7	13.2	12.7	5.1	3.3	11.4	Ø6.6	Ø7.9	65.8°



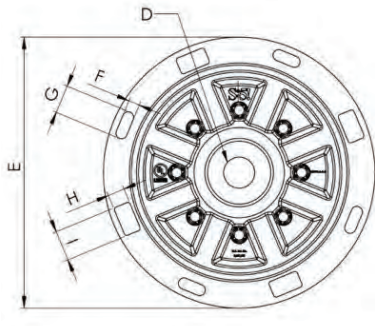

PV Disk 2.0 300 Series Stainless Steel									
UNIT	A	B	C	D	E	F	G	H	I
INCH	.039	.12	.22	Ø.34	Ø2.96	.12	.31	.86	.33
MM	1.0	3.0	5.6	Ø8.6	Ø75.2	3.0	7.9	21.8	8.4

2.4.2 Clamp Drawings

300 Series Stainless Steel Round Point Torx Setscrews

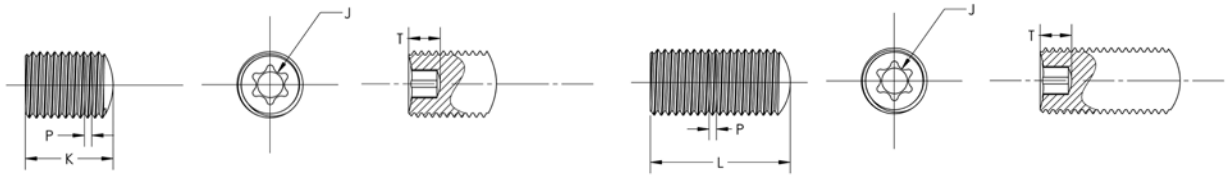

External Threads- Class 2A						
Size	**Series**	**Major Diameter (D)**	**Torx Socket Size (J)**	**Key**	**Length (K)**	**Length (L)**
3/8-24	**UNF**	**9.3mm 9.5mm**	**T-30**	**5.1mm**	**12.7mm**	**22.9mm**

Mini clamps shown also come in standard size (2 setscrew)



S-5-U™ Mini

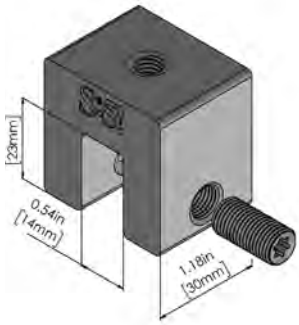

S-5-S™ Mini

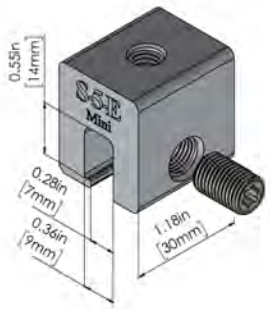

S-5-E™ Mini



S-5-V™ Mini



S-5-H90™ Mini



S-5-N™ Mini

Section 2.4.2

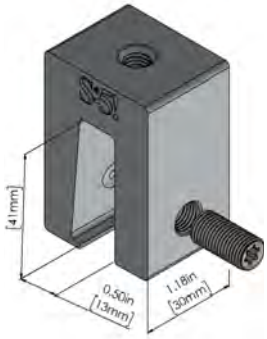

S-5-N 1.5™ Mini

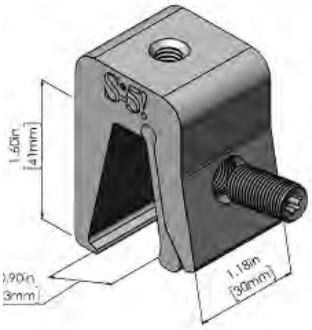

S-5-NH 1.5™ Mini

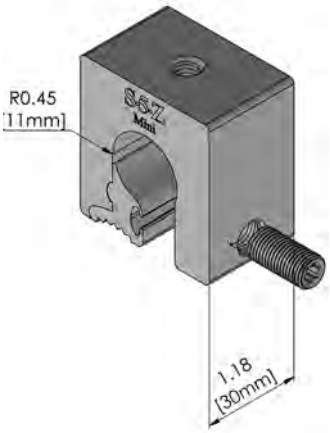

S-5-Z™ Mini

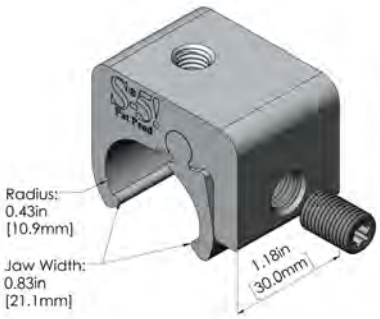

S-5-ZH™ Mini

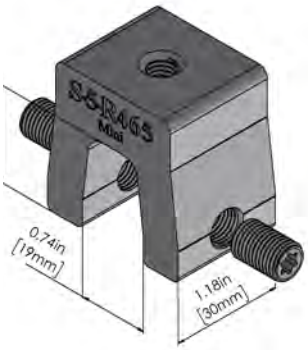

S-5-R465™ Mini

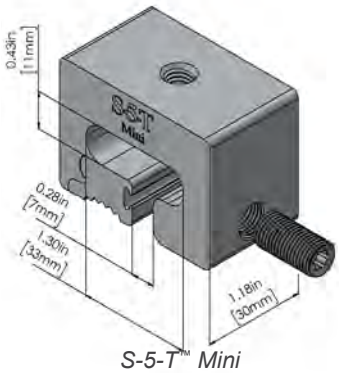

S-5-T™ Mini

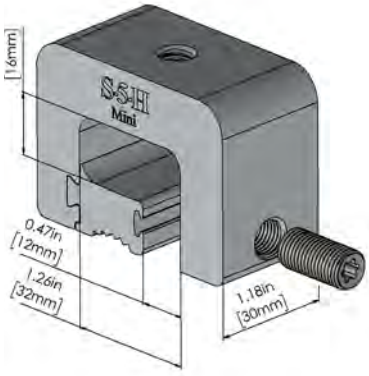

S-5-H™ Mini



S-5-K Grip™ Mini



S-5-D Grip™ Mini

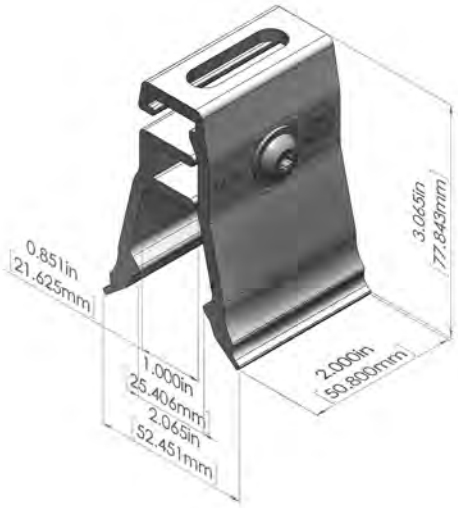

S-5-RC™



S-5-HR™

2.4.3 Bracket Drawings

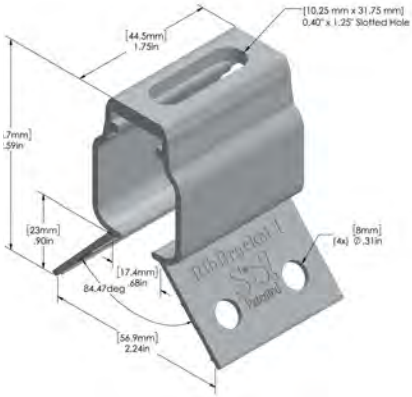

RibBracket™ I

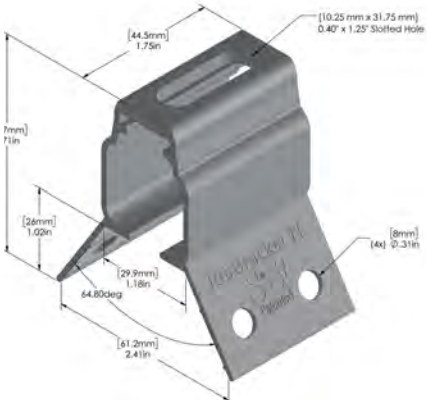

RibBracket™ II

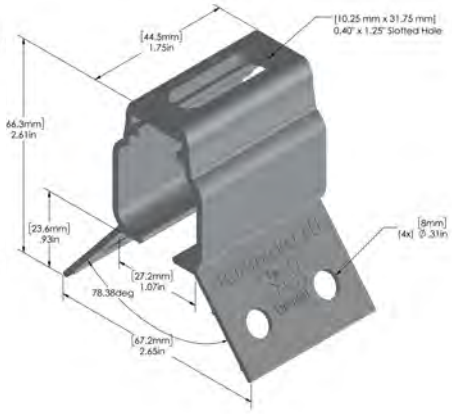

RibBracket™ III

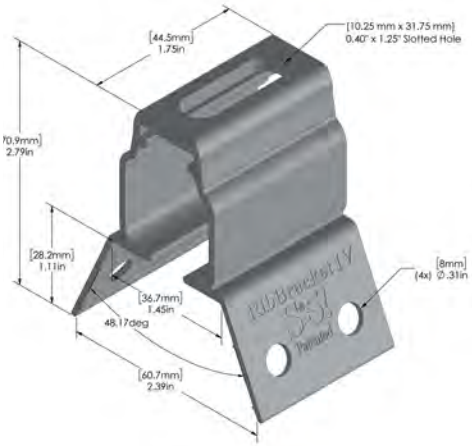

RibBracket™ IV

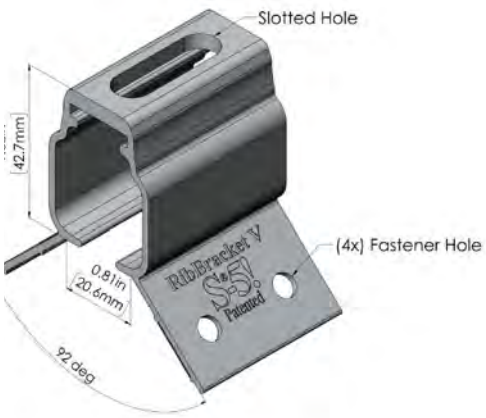

RibBracket™ V

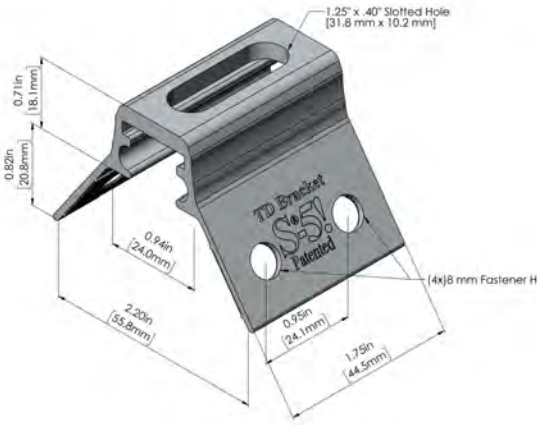

TD Bracket

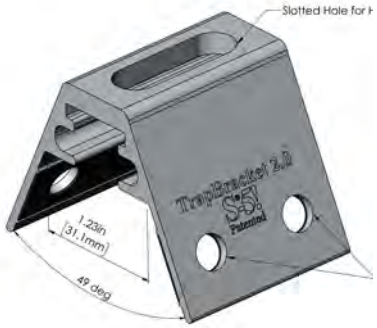

TrapBracket™ 2.0

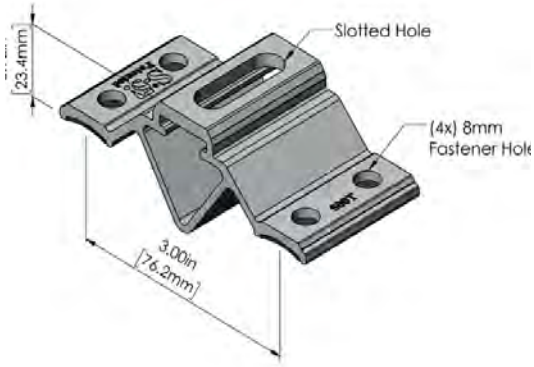

CorruBracket™ 500T

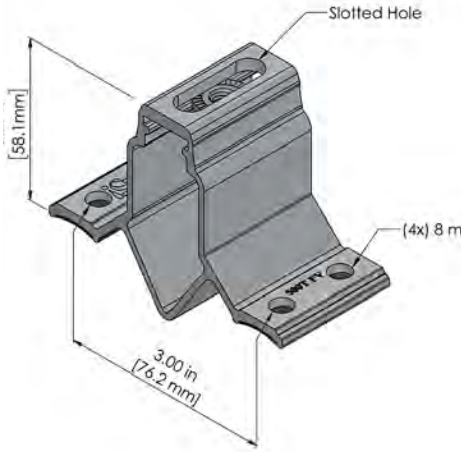

CorruBracket™ 500T PV

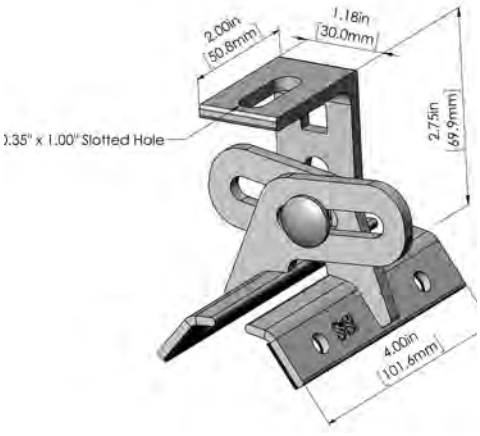

ProteaBracket™

METAL ROOF INNOVATIONS, LTD. (MRIL) S-5! LIMITED WARRANTY

Metal Roof Innovations, Ltd (MRIL) warrants that all S-5! products manufactured by it and bearing its name to be free from defects in material and workmanship on the date of first sale by an authorized MRIL distributor to the original purchaser. As purchaser's sole remedy for breach of this warranty, MRIL will repair or replace any part of the S-5! manufactured product which is defective for as long as the product is on the originally installed roof. This warranty applies only when the S-5! product is properly installed, used and maintained.

This warranty does not cover, and MRIL shall not be liable for, any malfunction, damage or wear caused by faulty installation, misapplication, negligence, misuse, abuse, accident, tampering, substitution of non-S-5! component parts, or incompatibility with equipment, structures, accessories or materials not manufactured by MRIL. The purchaser acknowledges that MRIL expresses no opinions as to the suitability of S-5! products or components for any specific application or project condition.

This warranty is conditioned upon (a) the prepaid return of the products claimed to be defective to an authorized MRIL distributor for verification of the claimed defect; and (b) receipt by MRIL of claims for product repair or replacement within thirty (30) days after discovery of the defect or after the defect could have been reasonably discovered. If the claimed defect is verified, MRIL will repair or replace free of charge any defective products manufactured by MRIL. Replacement product will be returned with transportation prepaid.

Claims under this warranty must be in writing and sent to MRIL along with a copy of this limited warranty, the part or product model name or number, date and place purchased, date installed, operating conditions, and date the defect was discovered. MRIL shall have the right to examine the components, related parts, and product application, including adjacent work on the actual building site. Purchaser grants MRIL access to the site of the installation during normal business hours for this purpose.

Disclaimers and Limitations. The terms of this warranty constitute purchaser's sole and exclusive remedy and are in lieu of any other warranties (expressed or implied). MRIL MAKES NO OTHER WARRANTIES ABOUT THE PRODUCTS AND DISCLAIMS ANY IMPLIED WARRANTIES OF MERCHANTABILITY AND FITNESS FOR A PARTICULAR PURPOSE OR APPLICATION. PURCHASER ASSUMES ALL RISK OF USE OF ANY OF THE PRODUCTS IN COMBINATION WITH OR AS A COMPONENT PART OF ANY PRODUCT APPLICATION. NOTWITHSTANDING THE ABOVE AND REGARDLESS OF THE CIRCUMSTANCES, MRIL'S TOTAL LIABILITY TO PURCHASER IS LIMITED TO AND SHALL IN NO EVENT EXCEED THE PURCHASE PRICE OF THE DEFECTIVE PRODUCTS. PURCHASER WAIVES ANY AND ALL OTHER CLAIMS. IN NO EVENT SHALL MRIL BE LIABLE FOR, AND PURCHASER WAIVES ALL CLAIMS AGAINST MRIL RESPECT TO, SPECIAL, INCIDENTAL, CONSEQUENTIAL OR EXEMPLARY DAMAGES, OR FOR ANY LOST PROFITS. EVERY FORM OF LIABILITY FOR DIRECT, SPECIAL, OR CONSEQUENTIAL DAMAGES IS EXPRESSLY EXCLUDED.

This warranty gives the purchaser specific legal rights. Purchaser may have other rights which vary from state to state. For a copy of warranty, please see: **https://s-5.com/warranty/**

WARNINGS

For questions regarding the installation of the PVKIT and EdgeGrab, please contact support@S-5.com or call (888) 825-3432. Due to the variety of attachment needs, PVKITs are sold separately from S-5! Mini clamps. The PVKIT fits both S-5! standard & Mini clamps.

THE S-5! CLAMP IS NOT APPROVED FOR USE AS A PERSONAL FALL RESTRAINT DEVICE!

ALWAYS PROVIDE WORKER FALL PROTECTION WHEN INSTALLING S-5! PRODUCTS. S-5! DOES NOT APPROVE PRODUCTS FOR USE IN PERSONAL FALL RESTRAINT/FALL PROTECTION APPLICATIONS. S-5! PRODUCTS MAY BE USED AS A COMPONENT IN A FALL PROTECTION SYSTEM ONLY WHEN THE SYSTEM MANUFACTURER PROVIDES APPROPRIATE APPROVALS.

- This document is an installation guide only, and the photographs and drawings herein are for the purpose of illustrating components and suggested roof inspection methods. Authority Having Jurisdiction (AHJ) rules, loading scenarios, load transfers, building structures, metal roofing systems and associated components can be complex and unique to each site. S-5! recommends consulting with a qualified design professional.
- Due to the many variables involved with specific metal roofing systems, climates and other job particulars, the manufacturer cannot and does not express any opinions as to the suitability of any S-5! assembly for any specific application and assumes no liability with respect thereto.
- The information in this guide is subject to change without notification.
- For specific test data of ultimate and allowable tensile load per metal roofing system and S-5! clamp, contact your S-5! distributor or visit S-5!'s website **https://www.s-5.com/load-tests/**.
- When published ultimate load and/or other raw data is used, an appropriate factor of safety (SF) must be applied.
- Any loads imposed on the S-5! clamps will be transferred to the panels. Panel seams must have sufficient flexural strength to carry these loads. Panels must also be adequately attached to the building structure, and the structure must be sufficient to carry these loads. The makers of S-5! clamps make no representations with respect to these variables. S-5! recommends consulting with a qualified design professional.
- Only use fasteners and hardware provided with S-5! Parts or sourced directly from S-5! or its licensed distributors.
- Clamp count and spacing tables referenced in this document address only wind loads on the assumption that wind produces the maximum load factor affecting an installation. Verify that other local factors, such as snow loads and earthquake effects, do not exceed the wind loads; precedence shall be given to any factor that does. Contact your S-5! representative for help with site specific calculations that account for snow loads in addition to wind loads.
- When PVKIT is installed in accordance with this manual it will comply with AS/NZS 1170.2 2021
- This document is designed to assist with installations utilizing S-5! clamps in conjunction with third party product applications in accordance with AS/NZS1170.2 2021

Responsibilities of the Installer:

- Verify setscrew torque during installation.
- Have a qualified licensed PE look for signs of weak building structure (roof, building structure and foundation).
- Ensure that the installation is performed by a licensed PV installation professional.
- Ensure that the installation complies with all roofing manufacturer warranties.
- Comply with all apllicable local or national building codes, including any that may supersede this manual.
- Ensure that S-5! and other products are appropriate for the particular installation and the installation environment.
- Employ appropriate earthing practices as outlined in AS/NZS 5033:2021 and ensure a safe electrical installation of the PV array.
- Consult module manufacturer's installation guide for mounting methods and loading requirements.
- Verify that the roof to which the S-5! products will be attached is structurally adequate. S-5! recommends consulting with a qualified PE.

WARNINGS

For questions regarding the installation of the PVKIT and EdgeGrab, please contact support@S-5.com or call (888) 825-3432. Due to the variety of attachment needs, PVKITs are sold separately from S-5! Mini clamps. The PVKIT fits both S-5! standard & Mini clamps.

THE S-5! CLAMP IS NOT APPROVED FOR USE AS A PERSONAL FALL RESTRAINT DEVICE!

ALWAYS PROVIDE WORKER FALL PROTECTION WHEN INSTALLING S-5! PRODUCTS. S-5! DOES NOT APPROVE PRODUCTS FOR USE IN PERSONAL FALL RESTRAINT/FALL PROTECTION APPLICATIONS. S-5! PRODUCTS MAY BE USED AS A COMPONENT IN A FALL PROTECTION SYSTEM ONLY WHEN THE SYSTEM MANUFACTURER PROVIDES APPROPRIATE APPROVALS.

- This document is an installation guide only, and the photographs and drawings herein are for the purpose of illustrating components and suggested roof inspection methods. Authority Having Jurisdiction (AHJ) rules, loading scenarios, load transfers, building structures, metal roofing systems and associated components can be complex and unique to each site. S-5! recommends consulting with a qualified design professional.
- Due to the many variables involved with specific metal roofing systems, climates and other job particulars, the manufacturer cannot and does not express any opinions as to the suitability of any S-5! assembly for any specific application and assumes no liability with respect thereto.
- The information in this guide is subject to change without notification.
- For specific test data of ultimate and allowable tensile load per metal roofing system and S-5! clamp, contact your S-5! distributor or visit S-5!'s website **https://www.s-5.com/load-tests/**.
- When published ultimate load and/or other raw data is used, an appropriate factor of safety (SF) must be applied.
- Any loads imposed on the S-5! clamps will be transferred to the panels. Panel seams must have sufficient flexural strength to carry these loads. Panels must also be adequately attached to the building structure, and the structure must be sufficient to carry these loads. The makers of S-5! clamps make no representations with respect to these variables. S-5! recommends consulting with a qualified design professional.
- Only use fasteners and hardware provided with S-5! Parts or sourced directly from S-5! or its licensed distributors.
- Clamp count and spacing tables referenced in this document address only wind loads on the assumption that wind produces the maximum load factor affecting an installation. Verify that other local factors, such as snow loads and earthquake effects, do not exceed the wind loads; precedence shall be given to any factor that does. Contact your S-5! representative for help with site specific calculations that account for snow loads in addition to wind loads.
- When PVKIT is installed in accordance with this manual it will comply with AS/NZS 1170.2 2021
- This document is designed to assist with installations utilizing S-5! clamps in conjunction with third party product applications in accordance with AS/NZS1170.2 2021

Responsibilities of the Installer:

- Verify setscrew torque during installation.
- Have a qualified licensed PE look for signs of weak building structure (roof, building structure and foundation).
- Ensure that the installation is performed by a licensed PV installation professional.
- Ensure that the installation complies with all roofing manufacturer warranties.
- Comply with all apllicable local or national building codes, including any that may supersede this manual.
- Ensure that S-5! and other products are appropriate for the particular installation and the installation environment.
- Employ appropriate earthing practices as outlined in AS/NZS 5033:2021 and ensure a safe electrical installation of the PV array.
- Consult module manufacturer's installation guide for mounting methods and loading requirements.
- Verify that the roof to which the S-5! products will be attached is structurally adequate. S-5! recommends consulting with a qualified PE.

CLAMP COUNT & SPACING TABLES

Easy reference tables created with the certified interactive tables

The following tables assume that determination has been made that the PV modules, PV railing and the roof itself to which the S-5! clamps will be attached is structurally adequate. The makers of S-5! clamps make no representations with respect to these variables. It is the responsibility of the user to verify this information, or seek assistance from a qualified design professional, if necessary.

Corrugated roofing
0.45 mm steel or thicker
CorruBracket 500T PV

Maximum module surface area of 2 m^2
Terrain Category 2.5 or greater

Australia:

Brackets per Module for PVKIT (2 Zone)								
	End Zones				Center Zones			
	Avg Roof Height (m)				Avg Roof Height (m)			
Region	**≤ 5**	**≤ 10**	**≤ 15**	**≤ 20**	**≤ 5**	**≤ 10**	**≤ 15**	**≤ 20**
A0	6	8	8	8	6	6	6	6
A(1-5)	6	6	6	8	4	6	6	6
B1	8	8	10	10	6	8	8	8
B2	8	10	10	12	8	8	8	10

	Brackets per Module for PVKIT (4 Zone)							
	Avg Roof Height (m)							
	≤ 5				**5 < h ≤ 10**			
Region	Corner	Edge	InEdge	Center	Corner	Edge	InEdge	Center
A0	10	8	6	4	12	10	8	6
A(1-5)	10	8	6	4	10	10	6	4
B1	14	12	8	6	14	12	10	6
B2	14	12	10	6	16	14	10	8
	10 < h ≤ 15				**15 < h ≤ 20**			
Region	Corner	Edge	InEdge	Center	Corner	Edge	InEdge	Center
A0	14	12	8	6	14	12	10	6
A(1-5)	12	10	8	6	12	10	8	6
B1	16	14	10	8	18	16	12	8
B2	18	16	12	8	20	16	12	8

New Zealand

Brackets per Module for PVKIT (2 Zone)								
	End Zones				Center Zones			
	Avg Roof Height (m)				Avg Roof Height (m)			
Region	**≤ 5**	**≤ 10**	**≤ 15**	**≤ 20**	**≤ 5**	**≤ 10**	**≤ 15**	**≤ 20**
NZ1	6	6	8	8	4	6	6	6
NZ2	6	6	8	8	4	6	6	6
NZ3	8	8	10	10	6	8	8	8
NZ4	8	8	8	10	6	6	8	8

	Brackets per Module for PVKIT (4 Zone)							
	Avg Roof Height (m)							
	≤ 5				**5 < h ≤ 10**			
Region	Corner	Edge	InEdge	Center	Corner	Edge	InEdge	Center
NZ1	10	8	6	4	10	10	8	6
NZ2	10	8	6	4	10	10	8	6
NZ3	12	12	8	6	14	12	10	6
NZ4	12	10	8	6	14	12	8	6
	10 < h ≤ 15				**15 < h ≤ 20**			
Region	Corner	Edge	InEdge	Center	Corner	Edge	InEdge	Center
NZ1	12	10	8	6	12	12	8	6
NZ2	12	10	8	6	12	12	8	6
NZ3	16	14	10	8	18	14	12	8
NZ4	14	12	10	6	16	14	10	8

Tata Trimdek
0.45 mm steel (or thicker)
RibBracket II

Maximum module surface area of 2 m^2
Terrain Category 2 or greater

Australia

Brackets per Module for PVKIT (2 Zone)								
	End Zones				Center Zones			
	Avg Roof Height (m)				Avg Roof Height (m)			
Region	**≤ 5**	**≤ 10**	**≤ 15**	**≤ 20**	**≤ 5**	**≤ 10**	**≤ 15**	**≤ 20**
A0	4	4	6	6	4	4	4	4
A(1-5)	4	4	6	6	4	4	4	4
B1	6	6	8	8	4	6	6	6
B2	6	8	8	8	6	6	6	6

	Brackets per Module for PVKIT (4 Zone)							
	Avg Roof Height (m)							
	≤ 5				5 < h ≤ 10			
Region	Corner	Edge	InEdge	Center	Corner	Edge	InEdge	Center
A0	6	6	4	4	8	6	6	4
A(1-5)	6	6	4	4	8	6	6	4
B1	10	8	6	4	10	10	8	6
B2	10	8	6	4	12	10	8	6
	10 < h ≤ 15				15 < h ≤ 20			
Region	Corner	Edge	InEdge	Center	Corner	Edge	InEdge	Center
A0	8	8	6	4	8	8	6	4
A(1-5)	8	8	6	4	8	8	6	4
B1	12	10	8	6	12	12	8	6
B2	14	12	8	6	14	12	10	6

New Zealand

Brackets per Module for PVKIT (2 Zone)								
	End Zones				Center Zones			
	Avg Roof Height (m)				Avg Roof Height (m)			
Region	**≤ 5**	**≤ 10**	**≤ 15**	**≤ 20**	**≤ 5**	**≤ 10**	**≤ 15**	**≤ 20**
NZ1	4	4	6	6	4	4	4	4
NZ2	4	4	6	6	4	4	4	4
NZ3	6	6	6	8	4	6	6	6
NZ4	6	6	6	6	4	6	6	6

	Brackets per Module for PVKIT (4 Zone)							
	Avg Roof Height (m)							
	≤ 5				5 < h ≤ 10			
Region	Corner	Edge	InEdge	Center	Corner	Edge	InEdge	Center
NZ1	6	6	4	4	8	8	6	4
NZ2	6	6	4	4	8	8	6	4
NZ3	8	8	6	4	10	10	8	6
NZ4	8	8	6	4	10	8	6	4
	10 < h ≤ 15				15 < h ≤ 20			
Region	Corner	Edge	InEdge	Center	Corner	Edge	InEdge	Center
NZ1	8	8	6	4	10	8	6	4
NZ2	8	8	6	4	10	8	6	4
NZ3	12	10	8	6	12	10	8	6
NZ4	10	10	8	6	12	10	8	6

Kingspan KS 1000
0.5 mm steel (or thicker)
RibBracket IV

Maximum module surface area of 2 m^2
Terrain Category 2 or greater

Australia

Brackets per Module for PVKIT (2 Zone)								
	End Zones				Center Zones			
	Avg Roof Height (m)				Avg Roof Height (m)			
Region	**≤ 5**	**≤ 10**	**≤ 15**	**≤ 20**	**≤ 5**	**≤ 10**	**≤ 15**	**≤ 20**
A0	4	6	6	6	4	4	6	6
A(1-5)	4	6	6	6	4	4	6	6
B1	6	8	8	8	6	6	8	8
B2	8	8	10	10	6	8	8	8

	Brackets per Module for PVKIT (4 Zone)							
	Avg Roof Height (m)							
	≤ 5				**5 < h ≤ 10**			
Region	Corner	Edge	InEdge	Center	Corner	Edge	InEdge	Center
A0	8	6	6	4	10	8	6	4
A(1-5)	8	6	6	4	10	8	6	4
B1	10	10	8	6	12	12	8	6
B2	12	10	8	6	NA	12	10	6
	10 < h ≤ 15				**15 < h ≤ 20**			
Region	Corner	Edge	InEdge	Center	Corner	Edge	InEdge	Center
A0	10	8	6	4	10	10	8	4
A(1-5)	10	8	6	4	10	10	8	4
B1	NA	12	10	6	NA	NA	10	6
B2	NA	NA	10	8	NA	NA	10	8

New Zealand

Brackets per Module for PVKIT (2 Zone)								
	End Zones				Center Zones			
	Avg Roof Height (m)				Avg Roof Height (m)			
Region	**≤ 5**	**≤ 10**	**≤ 15**	**≤ 20**	**≤ 5**	**≤ 10**	**≤ 15**	**≤ 20**
NZ1	4	6	6	6	4	4	6	6
NZ2	4	6	6	6	4	4	6	6
NZ3	6	8	8	8	6	6	6	8
NZ4	6	6	8	8	4	6	6	6

	Brackets per Module for PVKIT (4 Zone)							
	Avg Roof Height (m)							
	≤ 5				**5 < h ≤ 10**			
Region	Corner	Edge	InEdge	Center	Corner	Edge	InEdge	Center
NZ1	8	8	6	4	10	8	6	4
NZ2	8	8	6	4	10	8	6	4
NZ3	10	10	8	4	12	10	8	6
NZ4	10	8	6	4	12	10	8	6
	10 < h ≤ 15				**15 < h ≤ 20**			
Region	Corner	Edge	InEdge	Center	Corner	Edge	InEdge	Center
NZ1	10	10	8	4	10	10	8	6
NZ2	10	10	8	4	10	10	8	6
NZ3	NA	12	10	6	NA	12	10	6
NZ4	12	12	8	6	NA	12	8	6

Kingspan KS 1000
0.5 mm steel (or thicker)
TrapBracket 2.0
Maximum module surface area of 2 m^2
Terrain Category 2 or greater

Australia

Max Bracket Spacing (mm) for Rails (2 Zone)								
	End Zones				Center Zones			
	Avg Roof Height (m)				Avg Roof Height (m)			
Region	**≤ 5**	**≤ 10**	**≤ 15**	**≤ 20**	**≤ 5**	**≤ 10**	**≤ 15**	**≤ 20**
A0	1097	898	811	764	1350	1103	994	937
A(1-5)	1097	898	811	764	1350	1103	994	937
B1	735	604	546	516	901	739	668	630
B2	664	546	494	466	813	668	604	570

	Max Bracket Spacing (mm) for Rails (4 Zone)							
	Avg Roof Height (m)							
	≤ 5				5 < h ≤ 10			
Region	Corner	Edge	InEdge	Center	Corner	Edge	InEdge	Center
A0	605	702	948	1462	498	577	778	1193
A(1-5)	605	702	948	1462	498	577	778	1193
B1	403	474	637	974	337	390	524	799
B2	370	429	576	879	458	353	474	721
	10 < h ≤ 15				15 < h ≤ 20			
Region	Corner	Edge	InEdge	Center	Corner	Edge	InEdge	Center
A0	450	522	703	1076	425	492	663	1013
A(1-5)	450	522	703	1076	425	492	663	1013
B1	458	353	474	721	433	334	448	680
B2	415	480	429	652	392	453	405	615

Note: values highlighted in yellow indicate 3 rails are required

New Zealand

Max Bracket Spacing (mm) for Rails (2 Zone)								
	End Zones				Center Zones			
	Avg Roof Height (m)				Avg Roof Height (m)			
Region	**≤ 5**	**≤ 10**	**≤ 15**	**≤ 20**	**≤ 5**	**≤ 10**	**≤ 15**	**≤ 20**
NZ1	1044	856	773	729	1285	1050	948	893
NZ2	1044	856	773	729	1285	1050	948	893
NZ3	766	629	569	536	938	770	695	656
NZ4	832	684	618	583	1022	837	756	713

	Max Bracket Spacing (mm) for Rails (4 Zone)							
	Avg Roof Height (m)							
	≤ 5				5 < h ≤ 10			
Region	Corner	Edge	InEdge	Center	Corner	Edge	InEdge	Center
NZ1	577	669	903	1392	475	550	742	1137
NZ2	577	669	903	1392	475	550	742	1137
NZ3	426	493	664	1015	351	406	546	832
NZ4	462	535	721	1105	381	441	593	905
	10 < h ≤ 15				15 < h ≤ 20			
Region	Corner	Edge	InEdge	Center	Corner	Edge	InEdge	Center
NZ1	430	498	670	1025	405	470	632	965
NZ2	430	498	670	1025	405	470	632	965
NZ3	477	368	494	751	450	347	466	708
NZ4	345	399	536	817	488	377	506	770

Note: values highlighted in yellow indicate 3 rails are required

McElroy MaxRib
Trapezoidal Exposed Fastened Roofing
Protea AI Horizontal Orientation (PVKIT)
0.45 mm steel (or thicker)

Maximum module surface area of 2 m^2
Terrain Category 2 or greater

Australia

Brackets per Module for PVKIT (2 Zone)								
	End Zones				Center Zones			
	Avg Roof Height (m)				Avg Roof Height (m)			
Region	**≤ 5**	**≤ 10**	**≤ 15**	**≤ 20**	**≤ 5**	**≤ 10**	**≤ 15**	**≤ 20**
A0	4	6	6	6	4	4	6	6
A(1-5)	4	6	6	6	4	4	6	6
B1	6	8	8	8	6	6	8	8
B2	8	8	10	10	6	8	8	8

	Brackets per Module for PVKIT (4 Zone)							
	Avg Roof Height (m)							
	≤ 5				**5 < h ≤ 10**			
Region	Corner	Edge	InEdge	Center	Corner	Edge	InEdge	Center
A0	8	6	6	4	10	8	6	4
A(1-5)	8	6	6	4	10	8	6	4
B1	10	10	8	6	12	12	8	6
B2	12	10	8	6	NA	12	10	6
	10 < h ≤ 15				**15 < h ≤ 20**			
Region	Corner	Edge	InEdge	Center	Corner	Edge	InEdge	Center
A0	10	8	6	4	10	10	8	4
A(1-5)	10	8	6	4	10	10	8	4
B1	NA	12	10	6	NA	NA	10	6
B2	NA	NA	10	8	NA	NA	10	8

New Zealand

Brackets per Module for PVKIT (2 Zone)								
	End Zones				Center Zones			
	Avg Roof Height (m)				Avg Roof Height (m)			
Region	**≤ 5**	**≤ 10**	**≤ 15**	**≤ 20**	**≤ 5**	**≤ 10**	**≤ 15**	**≤ 20**
NZ1	4	6	6	6	4	4	6	6
NZ2	4	6	6	6	4	4	6	6
NZ3	6	8	8	8	6	6	6	8
NZ4	6	6	8	8	4	6	6	6

	Brackets per Module for PVKIT (4 Zone)							
	Avg Roof Height (m)							
	≤ 5				**5 < h ≤ 10**			
Region	Corner	Edge	InEdge	Center	Corner	Edge	InEdge	Center
NZ1	8	8	6	4	10	8	6	4
NZ2	8	8	6	4	10	8	6	4
NZ3	10	10	8	4	12	10	8	6
NZ4	10	8	6	4	12	10	8	6
	10 < h ≤ 15				**15 < h ≤ 20**			
Region	Corner	Edge	InEdge	Center	Corner	Edge	InEdge	Center
NZ1	10	10	8	4	10	10	8	6
NZ2	10	10	8	4	10	10	8	6
NZ3	NA	12	10	6	NA	12	10	6
NZ4	12	12	8	6	NA	12	8	6

McElroy MaxRib- Trapezoidal Exposed Fastened Roofing
Protea Al Vertical Orientation (Rails)
0.45 mm steel (or thicker)

Maximum module surface area of 2 m^2
Terrain Category 2 or greater

Australia

Max Bracket Spacing (mm) for Rails (2 Zone)								
	End Zones				Center Zones			
	Avg Roof Height (m)				Avg Roof Height (m)			
Region	**≤ 5**	**≤ 10**	**≤ 15**	**≤ 20**	**≤ 5**	**≤ 10**	**≤ 15**	**≤ 20**
A0	1267	1038	937	883	1559	1275	1149	1083
A(1-5)	1267	1038	937	883	1559	1275	1149	1083
B1	849	698	631	596	1041	854	771	728
B2	767	631	571	539	939	771	697	658

Max Bracket Spacing (mm) for Rails (4 Zone)								
	Avg Roof Height (m)							
	≤ 5				5 < h ≤ 10			
Region	Corner	Edge	InEdge	Center	Corner	Edge	InEdge	Center
A0	699	810	1095	1689	575	666	899	1379
A(1-5)	699	810	1095	1689	575	666	899	1379
B1	465	547	736	1125	390	451	606	923
B2	428	495	665	1015	353	408	548	833
	10 < h ≤ 15				15 < h ≤ 20			
Region	Corner	Edge	InEdge	Center	Corner	Edge	InEdge	Center
A0	520	603	812	1243	491	569	765	1171
A(1-5)	520	603	812	1243	491	569	765	1171
B1	353	408	548	833	333	385	517	786
B2	319	369	496	753	302	349	468	710

New Zealand

Max Bracket Spacing (mm) for Rails (2 Zone)								
	End Zones				Center Zones			
	Avg Roof Height (m)				Avg Roof Height (m)			
Region	**≤ 5**	**≤ 10**	**≤ 15**	**≤ 20**	**≤ 5**	**≤ 10**	**≤ 15**	**≤ 20**
NZ1	1206	989	893	842	1484	1213	1095	1032
NZ2	1206	989	893	842	1484	1213	1095	1032
NZ3	884	727	657	620	1084	890	803	758
NZ4	962	790	714	673	1180	967	873	823

Max Bracket Spacing (mm) for Rails (4 Zone)								
	Avg Roof Height (m)							
	≤ 5				5 < h ≤ 10			
Region	Corner	Edge	InEdge	Center	Corner	Edge	InEdge	Center
NZ1	666	773	1044	1608	549	636	857	1314
NZ2	666	773	1044	1608	549	636	857	1314
NZ3	492	570	767	1173	405	469	631	961
NZ4	534	618	833	1277	440	509	685	1046
	10 < h ≤ 15				15 < h ≤ 20			
Region	Corner	Edge	InEdge	Center	Corner	Edge	InEdge	Center
NZ1	496	575	774	1184	468	542	730	1115
NZ2	496	575	774	1184	468	542	730	1115
NZ3	367	425	570	868	347	401	538	818
NZ4	398	461	619	944	376	435	584	890

Lysaght KLIP-LOK 406 (Intermediate Rib)
0.48 mm steel (or thicker)
S-5-K Grip Mini with GXM 10 Insert

Maximum module surface area of 2 m^2
Terrain Category 2 or greater

Australia

Clamps per Module for PVKIT (2 Zone)								
	End Zones				Center Zones			
	Avg Roof Height (m)				Avg Roof Height (m)			
Region	**≤ 5**	**≤ 10**	**≤ 15**	**≤ 20**	**≤ 5**	**≤ 10**	**≤ 15**	**≤ 20**
A0	4	6	6	6	4	4	6	6
A(1-5)	4	6	6	6	4	4	6	6
B1	6	8	8	10	6	6	8	8
B2	8	8	10	10	6	8	8	8

Max Clamp Spacing (mm) for Rails (2 Zone)								
	End Zones				Center Zones			
	Avg Roof Height (m)				Avg Roof Height (m)			
Region	**≤ 5**	**≤ 10**	**≤ 15**	**≤ 20**	**≤ 5**	**≤ 10**	**≤ 15**	**≤ 20**
A0	1008	826	745	703	1241	1014	914	861
A(1-5)	1008	826	745	703	1241	1014	914	861
B1	676	556	502	474	828	680	614	579
B2	611	502	454	429	747	614	555	524

Clamps per Module for PVKIT (4 Zone)								
	Avg Roof Height (m)							
	≤ 5				**5 < h ≤ 10**			
Region	Corner	Edge	InEdge	Center	Corner	Edge	InEdge	Center
A0	8	8	6	4	10	8	6	4
A(1-5)	8	8	6	4	10	8	6	4
B1	12	10	8	6	14	12	10	6
B2	12	12	8	6	16	14	10	8
	10 < h ≤ 15				**15 < h ≤ 20**			
Region	Corner	Edge	InEdge	Center	Corner	Edge	InEdge	Center
A0	10	10	8	6	12	10	8	6
A(1-5)	10	10	8	6	12	10	8	6
B1	16	14	10	8	16	14	10	8
B2	16	14	12	8	18	16	12	8

	Max Clamp Spacing (mm) for Rails (4 Zone)							
	Avg Roof Height (m)							
	≤ 5				5 < h ≤ 10			
Region	Corner	Edge	InEdge	Center	Corner	Edge	InEdge	Center
A0	556	645	872	1344	457	530	715	1097
A(1-5)	556	645	872	1344	457	530	715	1097
B1	370	435	586	895	310	359	482	734
B2	340	394	530	808	281	325	436	663
	10 < h ≤ 15				15 < h ≤ 20			
Region	Corner	Edge	InEdge	Center	Corner	Edge	InEdge	Center
A0	414	480	646	989	391	452	609	931
A(1-5)	414	480	646	989	391	452	609	931
B1	281	325	436	663	265	307	412	626
B2	254	294	394	599	240	278	372	565

New Zealand

Clamps per Module for PVKIT (2 Zone)								
	End Zones				Center Zones			
	Avg Roof Height (m)				Avg Roof Height (m)			
Region	**≤ 5**	**≤ 10**	**≤ 15**	**≤ 20**	**≤ 5**	**≤ 10**	**≤ 15**	**≤ 20**
NZ1	6	6	6	6	4	6	6	6
NZ2	6	6	6	6	4	6	6	6
NZ3	6	8	8	10	6	6	8	8
NZ4	6	8	8	8	6	6	6	8
Max Clamp Spacing (mm) for Rails (2 Zone)								
	End Zones				Center Zones			
	Avg Roof Height (m)				Avg Roof Height (m)			
Region	**≤ 5**	**≤ 10**	**≤ 15**	**≤ 20**	**≤ 5**	**≤ 10**	**≤ 15**	**≤ 20**
NZ1	960	787	711	670	1181	965	871	821
NZ2	960	787	711	670	1181	965	871	821
NZ3	704	578	523	493	862	708	639	603
NZ4	765	628	568	536	939	770	695	655

	Clamps per Module for PVKIT (4 Zone)							
	Avg Roof Height (m)							
	≤ 5				5 < h ≤ 10			
Region	Corner	Edge	InEdge	Center	Corner	Edge	InEdge	Center
NZ1	8	8	6	4	10	8	6	4
NZ2	8	8	6	4	10	8	6	4
NZ3	12	10	8	6	14	12	8	6
NZ4	10	10	8	4	12	10	8	6
	10 < h ≤ 15				15 < h ≤ 20			
Region	Corner	Edge	InEdge	Center	Corner	Edge	InEdge	Center
NZ1	12	10	8	6	12	10	8	6
NZ2	12	10	8	6	12	10	8	6
NZ3	14	12	10	6	16	14	10	8
NZ4	14	12	10	6	14	12	10	6
	Max Clamp Spacing (mm) for Rails (4 Zone)							
	Avg Roof Height (m)							
	≤ 5				5 < h ≤ 10			
Region	Corner	Edge	InEdge	Center	Corner	Edge	InEdge	Center
NZ1	530	615	831	1279	436	506	682	1045
NZ2	530	615	831	1279	436	506	682	1045
NZ3	391	453	610	933	323	373	502	765
NZ4	425	492	663	1016	350	405	545	832
	10 < h ≤ 15				15 < h ≤ 20			
Region	Corner	Edge	InEdge	Center	Corner	Edge	InEdge	Center
NZ1	395	457	616	942	373	432	581	887
NZ2	395	457	616	942	373	432	581	887
NZ3	292	338	454	691	276	319	428	651
NZ4	317	367	493	751	299	346	465	708

Lysaght KLIP-LOK Classic 700 (Intermediate Rib)
0.46 mm steel (or thicker)
S-5-K Grip Mini with GXM 50 Insert

Maximum module surface area of 2 m^2
Terrain Category 2 or greater

Australia

Clamps per Module for PVKIT (2 Zone)								
	End Zones				Center Zones			
	Avg Roof Height (m)				Avg Roof Height (m)			
Region	**≤ 5**	**≤ 10**	**≤ 15**	**≤ 20**	**≤ 5**	**≤ 10**	**≤ 15**	**≤ 20**
A0	8	8	10	10	6	8	8	8
A(1-5)	8	8	10	10	6	8	8	8
B1	10	12	14	14	8	10	12	12
B2	12	14	14	16	10	12	12	14

Max Clamp Spacing (mm) for Rails (2 Zone)								
	End Zones				Center Zones			
	Avg Roof Height (m)				Avg Roof Height (m)			
Region	**≤ 5**	**≤ 10**	**≤ 15**	**≤ 20**	**≤ 5**	**≤ 10**	**≤ 15**	**≤ 20**
A0	640	525	473	446	788	644	581	547
A(1-5)	640	525	473	446	788	644	581	547
B1	429	353	319	301	526	432	390	368
B2	388	319	288	272	475	390	352	333

Clamps per Module for PVKIT (4 Zone)								
	Avg Roof Height (m)							
	≤ 5				**5 < h ≤ 10**			
Region	Corner	Edge	InEdge	Center	Corner	Edge	InEdge	Center
A0	12	10	8	6	14	12	10	6
A(1-5)	12	10	8	6	14	12	10	6
B1	NA	16	12	8	NA	NA	14	10
B2	NA	16	12	8	NA	NA	16	10
	10 < h ≤ 15				**15 < h ≤ 20**			
Region	Corner	Edge	InEdge	Center	Corner	Edge	InEdge	Center
A0	16	14	10	8	NA	14	12	8
A(1-5)	16	14	10	8	NA	14	12	8
B1	NA	NA	16	10	NA	NA	16	12
B2	NA	NA	16	12	NA	NA	NA	12

Max Clamp Spacing (mm) for Rails (4 Zone)								
Avg Roof Height (m)								
	≤ 5				5 < h ≤ 10			
Region	Corner	Edge	InEdge	Center	Corner	Edge	InEdge	Center
A0	353	410	554	854	291	337	454	697
A(1-5)	353	410	554	854	291	337	454	697
B1	235	277	372	569	295	342	306	467
B2	324	250	336	513	267	309	277	421
	10 < h ≤ 15				15 < h ≤ 20			
Region	Corner	Edge	InEdge	Center	Corner	Edge	InEdge	Center
A0	263	305	410	628	248	287	387	592
A(1-5)	263	305	410	628	248	287	387	592
B1	267	309	277	421	253	292	261	397
B2	242	280	251	381	NA	264	236	359

Note: values highlighted in yellow indicate 3 rails are required

New Zealand

Clamps per Module for PVKIT (2 Zone)								
	End Zones				Center Zones			
	Avg Roof Height (m)				Avg Roof Height (m)			
Region	**≤ 5**	**≤ 10**	**≤ 15**	**≤ 20**	**≤ 5**	**≤ 10**	**≤ 15**	**≤ 20**
NZ1	8	10	10	10	6	8	8	8
NZ2	8	10	10	10	6	8	8	8
NZ3	10	12	14	14	8	10	10	12
NZ4	10	12	12	12	8	10	10	10
Max Clamp Spacing (mm) for Rails (2 Zone)								
	End Zones				Center Zones			
	Avg Roof Height (m)				Avg Roof Height (m			
Region	**≤ 5**	**≤ 10**	**≤ 15**	**≤ 20**	**≤ 5**	**≤ 10**	**≤ 15**	**≤ 20**
NZ1	610	500	451	425	750	613	553	521
NZ2	610	500	451	425	750	613	553	521
NZ3	447	367	332	313	548	450	406	383
NZ4	486	399	361	340	596	489	441	416

	Clamps per Module for PVKIT (4 Zone)							
	Avg Roof Height (m)							
	≤ 5				5 < h ≤ 10			
Region	Corner	Edge	InEdge	Center	Corner	Edge	InEdge	Center
NZ1	12	12	8	6	16	14	10	8
NZ2	12	12	8	6	16	14	10	8
NZ3	NA	14	12	8	NA	NA	14	10
NZ4	16	14	10	8	NA	16	12	8
	10 < h ≤ 15				15 < h ≤ 20			
Region	Corner	Edge	InEdge	Center	Corner	Edge	InEdge	Center
NZ1	16	14	12	8	NA	16	12	8
NZ2	16	14	12	8	NA	16	12	8
NZ3	NA	NA	14	10	NA	NA	16	10
NZ4	NA	NA	14	10	NA	NA	14	10
	Max Clamp Spacing (mm) for Rails (4 Zone)							
	Avg Roof Height (m)							
	≤ 5				5 < h ≤ 10			
Region	Corner	Edge	InEdge	Center	Corner	Edge	InEdge	Center
NZ1	337	391	527	812	277	321	433	664
NZ2	337	391	527	812	277	321	433	664
NZ3	248	288	387	593	307	237	319	486
NZ4	270	313	421	645	333	257	346	528
	10 < h ≤ 15				15 < h ≤ 20			
Region	Corner	Edge	InEdge	Center	Corner	Edge	InEdge	Center
NZ1	251	290	391	598	237	274	369	564
NZ2	251	290	391	598	237	274	369	564
NZ3	278	322	288	439	263	304	272	414
NZ4	302	349	313	477	285	330	295	450

Note: values highlighted in yellow indicate 3 rails are required

Dimond- Dimondek 630
0.5 mm steel (or thicker)
S-5-D Grip Mini with GXM 50 Insert

Maximum module surface area of 2 m^2
Terrain Category 2 or greater

Australia:

Clamps per Module for PVKIT (2 Zone)								
	End Zones				Center Zones			
	Avg Roof Height (m)				Avg Roof Height (m)			
Region	**≤ 5**	**≤ 10**	**≤ 15**	**≤ 20**	**≤ 5**	**≤ 10**	**≤ 15**	**≤ 20**
A0	4	4	6	6	4	4	4	4
A(1-5)	4	4	6	6	4	4	4	4
B1	6	6	8	8	4	6	6	6
B2	6	8	8	8	6	6	6	8
Max Clamp Spacing for Rails (mm) (2 Zone)								
	End Zones				Center Zones			
	Avg Roof Height (m)				Avg Roof Height (m)			
Region	**≤ 5**	**≤ 10**	**≤ 15**	**≤ 20**	**≤ 5**	**≤ 10**	**≤ 15**	**≤ 20**
A0	1226	1004	906	855	1509	1234	1112	1048
A(1-5)	1226	1004	906	855	1509	1234	1112	1048
B1	822	676	611	576	1007	826	747	704
B2	743	611	552	521	909	747	675	637

	Clamps per Module for PVKIT (4 Zone)							
	Avg Roof Height (m)							
	≤ 5				**5 < h ≤ 10**			
Region	Corner	Edge	InEdge	Center	Corner	Edge	InEdge	Center
A0	6	6	4	4	8	8	6	4
A(1-5)	6	6	4	4	8	8	6	4
B1	10	8	6	4	12	10	8	6
B2	10	10	8	6	12	12	8	6
	10 < h ≤ 15				**15 < h ≤ 20**			
Region	Corner	Edge	InEdge	Center	Corner	Edge	InEdge	Center
A0	8	8	6	4	10	8	6	4
A(1-5)	8	8	6	4	10	8	6	4
B1	12	12	8	6	NA	12	8	6
B2	NA	12	10	6	NA	12	10	6

	Max Clamp Spacing (mm) for Rails (4 Zone)							
	Avg Roof Height (m)							
	≤ 5				5 < h ≤ 10			
Region	Corner	Edge	InEdge	Center	Corner	Edge	InEdge	Center
A0	676	784	1060	1635	556	645	870	1334
A(1-5)	676	784	1060	1635	556	645	870	1334
B1	450	530	713	1089	377	436	586	893
B2	414	479	644	983	341	395	530	806
	10 < h ≤ 15				15 < h ≤ 20			
Region	Corner	Edge	InEdge	Center	Corner	Edge	InEdge	Center
A0	503	583	786	1203	475	550	741	1133
A(1-5)	503	583	786	1203	475	550	741	1133
B1	341	395	530	806	322	373	501	761
B2	464	358	480	729	438	338	453	687

Note: values highlighted in yellow indicate 3 rails are required

New Zealand:

Clamps per Module for PVKIT (2 Zone)								
	End Zones				Center Zones			
	Avg Roof Height (m)				Avg Roof Height (m)			
Region	**≤ 5**	**≤ 10**	**≤ 15**	**≤ 20**	**≤ 5**	**≤ 10**	**≤ 15**	**≤ 20**
NZ1	4	6	6	6	4	4	4	6
NZ2	4	6	6	6	4	4	4	6
NZ3	6	6	8	8	4	6	6	6
NZ4	6	6	6	8	4	6	6	6
Max Clamp Spacing (mm) for Rails (2 Zone)								
	End Zones				Center Zones			
	Avg Roof Height (m)				Avg Roof Height (m)			
Region	**≤ 5**	**≤ 10**	**≤ 15**	**≤ 20**	**≤ 5**	**≤ 10**	**≤ 15**	**≤ 20**
NZ1	1167	957	864	814	1437	1174	1059	998
NZ2	1167	957	864	814	1437	1174	1059	998
NZ3	856	703	636	600	1049	861	778	733
NZ4	931	764	691	651	1142	936	845	797

	Clamps per Module for PVKIT (4 Zone)							
	Avg Roof Height (m)							
	≤ 5				5 < h ≤ 10			
Region	Corner	Edge	InEdge	Center	Corner	Edge	InEdge	Center
NZ1	8	6	4	4	8	8	6	4
NZ2	8	6	4	4	8	8	6	4
NZ3	10	8	6	4	12	10	8	6
NZ4	8	8	6	4	10	10	8	4
	10 < h ≤ 15				15 < h ≤ 20			
Region	Corner	Edge	InEdge	Center	Corner	Edge	InEdge	Center
NZ1	10	8	6	4	10	8	6	4
NZ2	10	8	6	4	10	8	6	4
NZ3	12	10	8	6	12	12	8	6
NZ4	12	10	8	6	12	10	8	6
	Max Clamp Spacing (mm) for Rails (4 Zone)							
	Avg Roof Height (m)							
	≤ 5				5 < h ≤ 10			
Region	Corner	Edge	InEdge	Center	Corner	Edge	InEdge	Center
NZ1	645	748	1010	1556	531	615	829	1271
NZ2	645	748	1010	1556	531	615	829	1271
NZ3	476	551	742	1135	392	454	610	930
NZ4	516	598	806	1235	426	493	663	1012
	10 < h ≤ 15				15 < h ≤ 20			
Region	Corner	Edge	InEdge	Center	Corner	Edge	InEdge	Center
NZ1	480	556	749	1146	453	525	706	1079
NZ2	480	556	749	1146	453	525	706	1079
NZ3	355	411	552	840	335	388	521	792
NZ4	385	446	599	913	364	421	566	861

Steel & Tube- PanelDek 400 (Intermediate Rib)
0.55 mm steel (or thicker)
S-5-R 465 Mini

Maximum module surface area of 2 m^2
Terrain Category 2 or greater

Australia

Clamps per Module for PVKIT (2 Zone)								
	End Zones				Center Zones			
	Avg Roof Height (m)				Avg Roof Height (m)			
Region	**≤ 5**	**≤ 10**	**≤ 15**	**≤ 20**	**≤ 5**	**≤ 10**	**≤ 15**	**≤ 20**
A0	6	6	6	8	4	6	6	6
A(1-5)	6	6	6	8	4	6	6	6
B1	8	8	10	10	6	8	8	8
B2	8	10	10	12	6	8	8	10
Max Clamp Spacing (mm) for Rails (2 Zone)								
	End Zones				Center Zones			
	Avg Roof Height (m)				Avg Roof Height (m)			
Region	**≤ 5**	**≤ 10**	**≤ 15**	**≤ 20**	**≤ 5**	**≤ 10**	**≤ 15**	**≤ 20**
A0	920	753	680	641	1132	925	834	786
A(1-5)	920	753	680	641	1132	925	834	786
B1	616	507	458	432	755	620	560	528
B2	557	458	414	391	682	560	506	478

Clamps per Module for PVKIT (4 Zone)								
	Avg Roof Height (m)							
	≤ 5				**5 < h ≤ 10**			
Region	Corner	Edge	InEdge	Center	Corner	Edge	InEdge	Center
A0	8	8	6	4	10	10	8	4
A(1-5)	8	8	6	4	10	10	8	4
B1	12	12	8	6	16	14	10	6
B2	14	12	10	6	16	14	12	8
	10 < h ≤ 15				**15 < h ≤ 20**			
Region	Corner	Edge	InEdge	Center	Corner	Edge	InEdge	Center
A0	12	10	8	6	12	10	8	6
A(1-5)	12	10	8	6	12	10	8	6
B1	16	14	12	8	18	16	12	8
B2	18	16	12	8	NA	16	12	8

	Max Clamp Spacing (mm) for Rails (4 Zone)							
	Avg Roof Height (m)							
	≤ 5				5 < h ≤ 10			
Region	Corner	Edge	InEdge	Center	Corner	Edge	InEdge	Center
A0	507	588	795	1226	417	484	652	1001
A(1-5)	507	588	795	1226	417	484	652	1001
B1	338	397	534	817	283	327	440	670
B2	310	359	483	737	256	296	398	605
	10 < h ≤ 15				15 < h ≤ 20			
Region	Corner	Edge	InEdge	Center	Corner	Edge	InEdge	Center
A0	378	437	589	902	356	413	556	850
A(1-5)	378	437	589	902	356	413	556	850
B1	256	296	398	605	242	280	375	571
B2	232	268	360	547	219	253	340	515

New Zealand

Clamps per Module for PVKIT (2 Zone)								
	End Zones				Center Zones			
	Avg Roof Height (m)				Avg Roof Height (m)			
Region	**≤ 5**	**≤ 10**	**≤ 15**	**≤ 20**	**≤ 5**	**≤ 10**	**≤ 15**	**≤ 20**
NZ1	6	6	8	8	4	6	6	6
NZ2	6	6	8	8	4	6	6	6
NZ3	8	8	10	10	6	8	8	8
NZ4	6	8	8	10	6	6	8	8
Max Clamp Spacing (mm) for Rails (2 Zone)								
	End Zones				Center Zones			
	Avg Roof Height (m)				Avg Roof Height (m)			
Region	**≤ 5**	**≤ 10**	**≤ 15**	**≤ 20**	**≤ 5**	**≤ 10**	**≤ 15**	**≤ 20**
NZ1	875	718	648	611	1077	881	795	749
NZ2	875	718	648	611	1077	881	795	749
NZ3	642	528	477	450	787	646	583	550
NZ4	698	573	518	489	857	702	634	598

	Clamps per Module for PVKIT (4 Zone)							
	Avg Roof Height (m)							
	≤ 5				5 < h ≤ 10			
Region	Corner	Edge	InEdge	Center	Corner	Edge	InEdge	Center
NZ1	10	8	6	4	12	10	8	6
NZ2	10	8	6	4	12	10	8	6
NZ3	12	10	8	6	14	12	10	6
NZ4	12	10	8	6	14	12	10	6
	10 < h ≤ 15				15 < h ≤ 20			
Region	Corner	Edge	InEdge	Center	Corner	Edge	InEdge	Center
NZ1	12	10	8	6	12	12	8	6
NZ2	12	10	8	6	12	12	8	6
NZ3	16	14	10	8	16	14	12	8
NZ4	14	12	10	6	16	14	10	8
	Max Clamp Spacing (mm) for Rails (4 Zone)							
	Avg Roof Height (m)							
	≤ 5				5 < h ≤ 10			
Region	Corner	Edge	InEdge	Center	Corner	Edge	InEdge	Center
NZ1	484	561	758	1167	398	461	622	953
NZ2	484	561	758	1167	398	461	622	953
NZ3	357	413	556	851	294	341	458	698
NZ4	387	449	605	927	319	370	497	759
	10 < h ≤ 15				15 < h ≤ 20			
Region	Corner	Edge	InEdge	Center	Corner	Edge	InEdge	Center
NZ1	360	417	562	859	340	394	530	809
NZ2	360	417	562	859	340	394	530	809
NZ3	266	308	414	630	252	291	391	594
NZ4	289	334	450	685	273	316	424	646

OC Metals- OCM 150 MS (Single Fold)
0.5 mm Steel (24 ga)
S-5-S Mini

Maximum module surface area of 2 m^2
Terrain Category 2 or greater

Australia

Clamps per Module for PVKIT (2 Zone)								
	End Zones				Center Zones			
	Avg Roof Height (m)				Avg Roof Height (m)			
Region	**≤ 5**	**≤ 10**	**≤ 15**	**≤ 20**	**≤ 5**	**≤ 10**	**≤ 15**	**≤ 20**
A0	4	4	4	4	4	4	4	4
A(1-5)	4	4	4	4	4	4	4	4
B1	4	6	6	6	4	4	6	6
B2	6	6	6	6	4	6	6	6
Max Clamp Spacing (mm) for Rails (2 Zone)								
	End Zones				Center Zones			
	Avg Roof Height (m)				Avg Roof Height (m)			
Region	**≤ 5**	**≤ 10**	**≤ 15**	**≤ 20**	**≤ 5**	**≤ 10**	**≤ 15**	**≤ 20**
A0	1601	1311	1183	1116	1970	1611	1452	1368
A(1-5)	1601	1311	1183	1116	1970	1611	1452	1368
B1	1073	882	797	752	1315	1079	975	919
B2	969	797	721	681	1187	975	881	831

	Clamps per Module for PVKIT (4 Zone)							
	Avg Roof Height (m)							
	≤ 5				**5 < h ≤ 10**			
Region	Corner	Edge	InEdge	Center	Corner	Edge	InEdge	Center
A0	6	4	4	4	6	6	4	4
A(1-5)	6	4	4	4	6	6	4	4
B1	8	6	6	4	NA	8	6	4
B2	8	8	6	4	NA	8	6	4
	10 < h ≤ 15				**15 < h ≤ 20**			
Region	Corner	Edge	InEdge	Center	Corner	Edge	InEdge	Center
A0	8	6	4	4	8	6	6	4
A(1-5)	8	6	4	4	8	6	6	4
B1	NA	8	6	4	NA	NA	8	6
B2	NA	NA	8	6	NA	NA	8	6

	Max Clamp Spacing (mm) for Rails (4 Zone)							
	Avg Roof Height (m)							
	≤ 5				5 < h ≤ 10			
Region	Corner	Edge	InEdge	Center	Corner	Edge	InEdge	Center
A0	883	1024	1384	2134	726	842	1135	1742
A(1-5)	883	1024	1384	2134	726	842	1135	1742
B1	588	691	930	1422	492	570	765	1166
B2	540	625	841	1283	446	516	692	1053
	10 < h ≤ 15				15 < h ≤ 20			
Region	Corner	Edge	InEdge	Center	Corner	Edge	InEdge	Center
A0	657	762	1026	1571	620	718	967	1479
A(1-5)	657	762	1026	1571	620	718	967	1479
B1	446	516	692	1053	421	487	654	993
B2	605	467	626	951	572	441	591	897

Note: values highlighted in yellow indicate 3 rails are required

New Zealand

Clamps per Module for PVKIT (2 Zone)								
	End Zones				Center Zones			
	Avg Roof Height (m)				Avg Roof Height (m)			
Region	**≤ 5**	**≤ 10**	**≤ 15**	**≤ 20**	**≤ 5**	**≤ 10**	**≤ 15**	**≤ 20**
NZ1	4	4	4	4	4	4	4	4
NZ2	4	4	4	4	4	4	4	4
NZ3	4	6	6	6	4	4	4	6
NZ4	4	6	6	6	4	4	4	4
Max Clamp Spacing (mm) for Rails (2 Zone)								
	End Zones				Center Zones			
	Avg Roof Height (m)				Avg Roof Height (m)			
Region	**≤ 5**	**≤ 10**	**≤ 15**	**≤ 20**	**≤ 5**	**≤ 10**	**≤ 15**	**≤ 20**
NZ1	1524	1249	1128	1063	1875	1533	1383	1303
NZ2	1524	1249	1128	1063	1875	1533	1383	1303
NZ3	1117	918	830	783	1369	1124	1015	957
NZ4	1215	998	902	851	1491	1222	1103	1040

	Clamps per Module for PVKIT (4 Zone)							
	Avg Roof Height (m)							
	≤ 5				5 < h ≤ 10			
Region	Corner	Edge	InEdge	Center	Corner	Edge	InEdge	Center
NZ1	6	6	4	4	6	6	4	4
NZ2	6	6	4	4	6	6	4	4
NZ3	8	6	6	4	8	8	6	4
NZ4	6	6	4	4	8	8	6	4
	10 < h ≤ 15				15 < h ≤ 20			
Region	Corner	Edge	InEdge	Center	Corner	Edge	InEdge	Center
NZ1	8	6	6	4	8	6	6	4
NZ2	8	6	6	4	8	6	6	4
NZ3	NA	8	6	4	NA	8	6	4
NZ4	8	8	6	4	NA	8	6	4
	Max Clamp Spacing (mm) for Rails (4 Zone)							
	Avg Roof Height (m)							
	≤ 5				5 < h ≤ 10			
Region	Corner	Edge	InEdge	Center	Corner	Edge	InEdge	Center
NZ1	842	976	1319	2031	693	803	1082	1660
NZ2	842	976	1319	2031	693	803	1082	1660
NZ3	621	720	969	1482	512	593	797	1214
NZ4	674	781	1052	1613	556	643	866	1321
	10 < h ≤ 15				15 < h ≤ 20			
Region	Corner	Edge	InEdge	Center	Corner	Edge	InEdge	Center
NZ1	627	726	978	1496	592	685	922	1409
NZ2	627	726	978	1496	592	685	922	1409
NZ3	464	537	721	1097	438	507	680	1034
NZ4	503	582	783	1192	475	550	738	1124

Englert- Series 1300 (DBF)
0.5 mm steel (or thicker)
S-5-E Mini

Maximum module surface area of 2 m^2
Terrain Category 2 or greater

Australia

Clamps per Module for PVKIT (2 Zone)								
	End Zones				Center Zones			
	Avg Roof Height (m)				Avg Roof Height (m)			
Region	**≤ 5**	**≤ 10**	**≤ 15**	**≤ 20**	**≤ 5**	**≤ 10**	**≤ 15**	**≤ 20**
A0	4	4	4	4	4	4	4	4
A(1-5)	4	4	4	4	4	4	4	4
B1	4	4	4	6	4	4	4	4
B2	4	4	6	6	4	4	4	4

Max Clamp Spacing (mm) for Rails (2 Zone)								
	End Zones				Center Zones			
	Avg Roof Height (m)				Avg Roof Height (m)			
Region	**≤ 5**	**≤ 10**	**≤ 15**	**≤ 20**	**≤ 5**	**≤ 10**	**≤ 15**	**≤ 20**
A0	2010	1646	1485	1401	2473	2022	1822	1717
A(1-5)	2010	1646	1485	1401	2473	2022	1822	1717
B1	1347	1107	1001	945	1651	1354	1224	1154
B2	1217	1001	905	854	1490	1224	1106	1044

	Clamps per Module for PVKIT (4 Zone)							
	Avg Roof Height (m)							
	≤ 5				**≤ 10**			
Region	Corner	Edge	InEdge	Center	Corner	Edge	InEdge	Center
A0	4	4	4	4	6	4	4	4
A(1-5)	4	4	4	4	6	4	4	4
B1	6	6	4	4	8	6	6	4
B2	6	6	4	4	8	8	6	4
	≤ 15				**≤ 20**			
Region	Corner	Edge	InEdge	Center	Corner	Edge	InEdge	Center
A0	6	6	4	4	6	6	4	4
A(1-5)	6	6	4	4	6	6	4	4
B1	8	8	6	4	8	8	6	4
B2	8	8	6	4	NA	8	6	4

	Max Clamp Spacing (mm) for Rails (4 Zone)							
	Avg Roof Height (m)							
	≤ 5				5 < h ≤ 10			
Region	Corner	Edge	InEdge	Center	Corner	Edge	InEdge	Center
A0	1108	1285	1737	2679	912	1057	1425	2187
A(1-5)	1108	1285	1737	2679	912	1057	1425	2187
B1	738	868	1168	1785	618	715	961	1464
B2	678	785	1055	1610	560	647	869	1322
	10 < h ≤ 15				15 < h ≤ 20			
Region	Corner	Edge	InEdge	Center	Corner	Edge	InEdge	Center
A0	825	956	1288	1972	779	902	1214	1857
A(1-5)	825	956	1288	1972	779	902	1214	1857
B1	560	647	869	1322	528	611	820	1247
B2	507	586	786	1194	479	553	742	1126

New Zealand

Clamps per Module for PVKIT (2 Zone)								
	End Zones				Center Zones			
	Avg Roof Height (m)				Avg Roof Height (m)			
Region	**≤ 5**	**≤ 10**	**≤ 15**	**≤ 20**	**≤ 5**	**≤ 10**	**≤ 15**	**≤ 20**
NZ1	4	4	4	4	4	4	4	4
NZ2	4	4	4	4	4	4	4	4
NZ3	4	4	4	6	4	4	4	4
NZ4	4	4	4	4	4	4	4	4
Max Clamp Spacing (mm) for Rails (2 Zone)								
	End Zones				Center Zones			
	Avg Roof Height (m)				Avg Roof Height (m)			
Region	**≤ 5**	**≤ 10**	**≤ 15**	**≤ 20**	**≤ 5**	**≤ 10**	**≤ 15**	**≤ 20**
NZ1	1913	1568	1416	1335	2354	1924	1736	1636
NZ2	1913	1568	1416	1335	2354	1924	1736	1636
NZ3	1403	1153	1042	983	1719	1411	1274	1202
NZ4	1525	1253	1132	1068	1872	1534	1385	1306

	Clamps per Module for PVKIT (4 Zone)							
	Avg Roof Height (m)							
	≤ 5				5 < h ≤ 10			
Region	Corner	Edge	InEdge	Center	Corner	Edge	InEdge	Center
NZ1	4	4	4	4	6	4	4	4
NZ2	4	4	4	4	6	4	4	4
NZ3	6	6	4	4	8	6	4	4
NZ4	6	6	4	4	6	6	4	4
	10 < h ≤ 15				15 < h ≤ 20			
Region	Corner	Edge	InEdge	Center	Corner	Edge	InEdge	Center
NZ1	6	6	4	4	6	6	4	4
NZ2	6	6	4	4	6	6	4	4
NZ3	8	6	6	4	8	8	6	4
NZ4	8	6	6	4	8	6	6	4
	Max Clamp Spacing (mm) for Rails (4 Zone)							
	Avg Roof Height (m)							
	≤ 5				5 < h ≤ 10			
Region	Corner	Edge	InEdge	Center	Corner	Edge	InEdge	Center
NZ1	1057	1226	1655	2550	870	1008	1359	2083
NZ2	1057	1226	1655	2550	870	1008	1359	2083
NZ3	780	903	1216	1860	643	744	1000	1525
NZ4	846	981	1321	2025	698	808	1087	1658
	10 < h ≤ 15				15 < h ≤ 20			
Region	Corner	Edge	InEdge	Center	Corner	Edge	InEdge	Center
NZ1	787	912	1227	1878	743	860	1158	1769
NZ2	787	912	1227	1878	743	860	1158	1769
NZ3	582	674	905	1377	550	636	854	1298
NZ4	632	731	982	1497	596	690	927	1411

Wolf Engineering, LLC
3409 N 7th Ave PMB 2017
Phoenix, AZ 85013

Tel. (520) 599-5522
info@wolfengineer.com
www.wolfengineer.com

June 18, 2023

S-5!
8750 Walker Road
Colorado Springs, CO 80908
U.S.A.

S-5! Design Tool Certificate

We have thoroughly reviewed the proprietary S-5! calculation tool for the correct implementation of the applicable Australian Design Standards for rooftop solar arrays. The design tool determines the number of attachments per module on metal standing seam roofs and exposed fastened metal roofs. Various roof systems can be analyzed including monopitch and gable roofs.

The design outputs of the design tool comply with the following Australian Standards including amendments:

- AS 1170:0 – 2002 Structural Design Actions, Part 0: General Principles
- AS 1170.1 – 2002 (R2016) Structural Design Actions, Part 1: Permanent, imposed and other actions
- AS 1170.2 – 2021 Structural Design Actions, Part 2: Wind actions

The following conditions were taken into account:

- Wind regions: A, B, C, D
- Wind terrain categories 1 through 4
- Wind average recurrence interval up to 200 years
- Roof height up to 20 m

The number of attachments per module depends on the clamp or bracket capacity.

This acceptance letter excludes verification of the building structure and roof deck components. The review is valid for one year from the date of this letter.

Please call the undersigned if you have any queries.

Yours faithfully,



Dr. Wolfgang Fritz
Dipl.-Ing., Ph.D., MIE Aust., CP Eng., NER, RPEQ No.19053

Wolf Engineering, LLC
3409 N 7th Ave PMB 2017
Phoenix, AZ 85013

Tel. (520) 599-5522
info@wolfengineer.com
www.wolfengineer.com

August 22, 2023

S-5!
8750 Walker Road
Colorado Springs, CO 80908
U.S.A.

S-5! Clamp, Bracket, and PVKIT Certificate

We have thoroughly reviewed the proprietary S-5! calculation tool and all generated tables for the correct implementation of the applicable Australian Design Standards for rooftop solar arrays. Each table is generated for a specific roofing manufacturer and allows for user inputs about the solar module size. The design tool determines the number of attachments per module or clamp spacings on metal standing seam roofs and exposed fastened metal roofs.

The design outputs of the design tool comply with the following Australian Standards including amendments:

- AS/NZS 1170.0 – 2002 Structural Design Actions, Part 0: General Principles
- AS/NZS 1170.1 – 2002 (R2016) Structural Design Actions, Part 1: Permanent, imposed and other actions
- AS/NZS 1170.2 – 2021 Structural Design Actions, Part 2: Wind actions

The following conditions were taken into account:

- Wind regions: A and B
- Wind terrain categories 1 through 4
- Wind average recurrence interval up to 200 years
- Roof height up to 20 m

The number of attachments per module or the maximum spacing depends on the clamp or bracket capacity. The table in the Appendix to this certificate specifies the legend of the version number for each roof type.

This acceptance letter excludes verification of the building structure and roof deck components. The review is valid for one year from the date of this letter.

Please call the undersigned if you have any queries.

Yours faithfully,

Dr. Wolfgang Fritz
Dipl.-Ing., Ph.D., MIE Aust., CP Eng., NER, RPEQ No.19053

AS/NZS 1170 Cert Table Version Numbers

2 Zone

Roof MFG	Roof type	Australia ID
BlueScope	ColorBond (0.45 mm)	AS117055_2Z_BSCB_045_V1_080923
Dimond	Dimondek 630 (0.5 mm)	AS117055_2Z_DD630_05_V1_080923
Englert	Series 1300 (0.5 mm)	AS117055_2Z_ES1300_05_V1_080923
Kingspan	KS 1000 w RBIV (0.5 mm)	AS117055_2Z_KS1000RBIV_05_V1_080923
Kingspan	KS 1000 w TB2 (0.5 mm)	AS117055_2Z_KS1000TB2_05_V1_080923
Lysaght	Klip-Lok 406 (0.48 mm)	AS117055_2Z_KL406_048_V1_080923
Lysaght	Klip-Lok Classic 700 (0.46 mm)	AS117055_2Z_KLC700_046_V1_080923
OCM	150 MS (SF) (0.5 mm)	AS117055_2Z_OCM150MSSF_05_V1_080923
	R-Panel Horizontal (0.5 mm)	AS117055_2Z_RP05HZ_05_V1_080923
Mcelroy	Max Rib Horizontal (0.45 mm)	AS117055_2Z_MR045HZ_045_V1_080923
	R-Panel Vertical (0.5 mm)	AS117055_2Z_RP05V_05_V1_080923
	R-Panel Vertical (0.45 mm)	AS117055_2Z_RP045V_045_V1_080923
Steel & Tube	PanelDek 400 Intermediate (0.55 mm)	AS117055_2Z_STPD400INT_055_080923
Steel & Tube	PanelDek 400 Lapped (0.55 mm)	AS117055_2Z_STPD400LAP_055_080923
Tata	Trimdek (0.45 mm)	AS117055_2Z_TTTD_045_080923

4 Zone

Roof MFG	Roof type	Australia ID
BlueScope	ColorBond (0.45 mm)	AS117055_4Z_BSCB_045_V1_080923
Dimond	Dimondek 630 (0.5 mm)	AS117055_4Z_DD630_05_V1_080923
Englert	Series 1300 (0.5 mm)	AS117055_4Z_ES1300_05_V1_080923
Kingspan	KS 1000 w RBIV (0.5 mm)	AS117055_4Z_KS1000RBIV_05_V1_080923
Kingspan	KS 1000 w TB2 (0.5 mm)	AS117055_4Z_KS1000TB2_05_V1_080923
Lysaght	Klip-Lok 406 (0.48 mm)	AS117055_4Z_KL406_048_V1_080923
Lysaght	Klip-Lok Classic 700 (0.46 mm)	AS117055_4Z_KLC700_046_V1_080923
OCM	150 MS (SF) (0.5 mm)	AS117055_4Z_OCM150MSSF_05_V1_080923
	R-Panel Horizontal (0.5 mm)	AS117055_4Z_RP05HZ_05_V1_080923
Mcelroy	Max Rib Horizontal (0.45 mm)	AS117055_4Z_MR045HZ_045_V1_080923
	R-Panel Vertical (0.5 mm)	AS117055_4Z_RP05V_05_V1_080923
	R-Panel Vertical (0.45 mm)	AS117055_4Z_RP045V_045_V1_080923
Steel & Tube	PanelDek 400 Intermediate (0.55 mm)	AS117055_4Z_STPD400INT_055_080923
Steel & Tube	PanelDek 400 Lapped (0.55 mm)	AS117055_4Z_STPD400LAP_055_080923
Tata	Trimdek (0.45 mm)	AS117055_4Z_TTTD_045_080923

2 Zone

Roof MFG	Roof type	New Zealand ID
BlueScope	ColorBond (0.45 mm)	NZ1170S5_2Z_BSCB_045_V1_080923
Dimond	Dimondek 630 (0.5 mm)	NZ1170S5_2Z_DD630_05_V1_080923
Englert	Series 1300 (0.5 mm)	NZ1170S5_2Z_ES1300_05_V1_080923
Kingspan	KS 1000 w RBIV (0.5 mm)	NZ1170S5_2Z_KS1000RBIV_05_V1_080923
Kingspan	KS 1000 w TB2 (0.5 mm)	NZ1170S5_2Z_KS1000TB2_05_V1_080923
Lysaght	Klip-Lok 406 (0.48 mm)	NZ1170S5_2Z_KL406_048_V1_080923
Lysaght	Klip-Lok Classic 700 (0.46 mm)	NZ1170S5_2Z_KLC700_046_V1_080923
OCM	150 M5 (SF) (0.5 mm)	NZ1170S5_2Z_OCM150M5SF_05_V1_080923
	R-Panel Horizontal (0.5 mm)	NZ1170S5_2Z_RP05HZ_05_V1_080923
Mcelroy	Max Rib Horizontal (0.45 mm)	NZ1170S5_2Z_MR045HZ_045_V1_080923
	R-Panel Vertical (0.5 mm)	NZ1170S5_2Z_RP05V_05_V1_080923
	R-Panel Vertical (0.45 mm)	NZ1170S5_2Z_RP045V_045_V1_080923
Steel & Tube	PanelDek 400 Intermediate (0.55 mm)	NZ1170S5_2Z_STPD400INT_055_080923
Steel & Tube	PanelDek 400 Lapped (0.55 mm)	NZ1170S5_2Z_STPD400LAP_055_080923
Tata	Trimdek (0.45 mm)	NZ1170S5_2Z_TTTD_045_080923

4 Zone

Roof MFG	Roof type	New Zealand ID
BlueScope	ColorBond (0.45 mm)	NZ1170S5_4Z_BSCB_045_V1_080923
Dimond	Dimondek 630 (0.5 mm)	NZ1170S5_4Z_DD630_05_V1_080923
Englert	Series 1300 (0.5 mm)	NZ1170S5_4Z_ES1300_05_V1_080923
Kingspan	KS 1000 w RBIV (0.5 mm)	NZ1170S5_4Z_KS1000RBIV_05_V1_080923
Kingspan	KS 1000 w TB2 (0.5 mm)	NZ1170S5_4Z_KS1000TB2_05_V1_080923
Lysaght	Klip-Lok 406 (0.48 mm)	NZ1170S5_4Z_KL406_048_V1_080923
Lysaght	Klip-Lok Classic 700 (0.46 mm)	NZ1170S5_4Z_KLC700_046_V1_080923
OCM	150 M5 (SF) (0.5 mm)	NZ1170S5_4Z_OCM150M5SF_05_V1_080923
	R-Panel Horizontal (0.5 mm)	NZ1170S5_4Z_RP05HZ_05_V1_080923
Mcelroy	Max Rib Horizontal (0.45 mm)	NZ1170S5_4Z_MR045HZ_045_V1_080923
	R-Panel Vertical (0.5 mm)	NZ1170S5_4Z_RP05V_05_V1_080923
	R-Panel Vertical (0.45 mm)	NZ1170S5_4Z_RP045V_045_V1_080923
Steel & Tube	PanelDek 400 Intermediate (0.55 mm)	NZ1170S5_4Z_STPD400INT_055_080923
Steel & Tube	PanelDek 400 Lapped (0.55 mm)	NZ1170S5_4Z_STPD400LAP_055_080923
Tata	Trimdek (0.45 mm)	NZ1170S5_4Z_TTTD_045_080923

























Tested. Trusted. Engineered.

S-5!®
The Right Way

12730 Black Forest Rd.
Colorado Springs, CO 80908

(888) 825-3432

www.S-5.com
support@s-5.com