S-5-HR

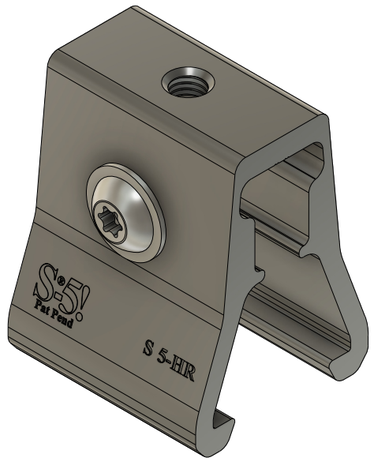

Top

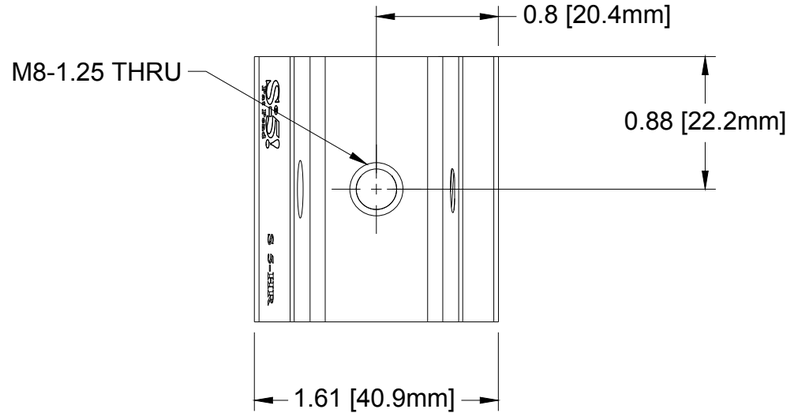

Left

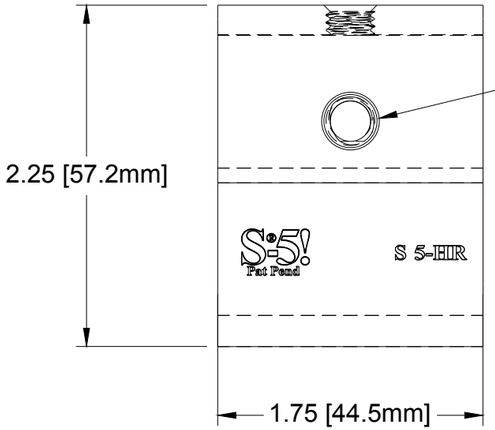

Front

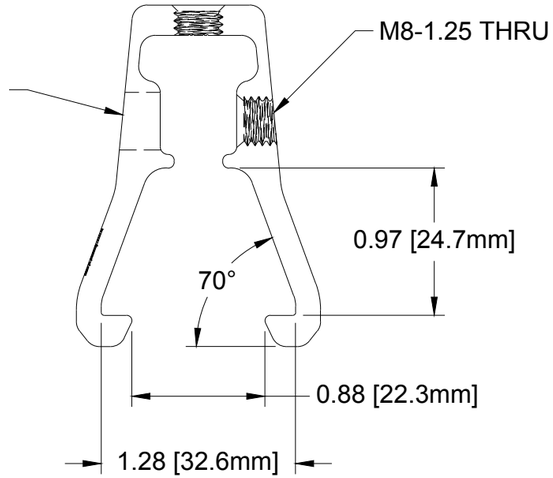

Genaral Notes:

1. S-5-HR
2. 30mm 300 Series Stainless Steel M8 Bolt
3. Example Roof

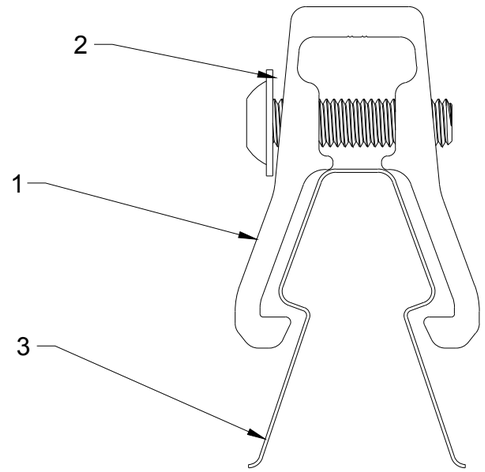

MATERIAL: 6000 Series Al	S-5!® METAL ROOF INNOVATIONS, LTD. 8750 WALKER RD COLORADO SPRINGS, CO 80908 719-495-0518 719-495-0045 (FAX)
EST ASSEMBLY WT: 0.18 LB	
HARDWARE: 30mm M8 Bolt - T30 DRIVE	TITLE: S-5-HR [CCD]
	DRAWING NO.: HRPV-A-0-A · DRAWN BY: SB · DATE: 03/15/2023
	SCALE: 1:1 · FILE NAME: HRPV-A-0-A (S-5-HR) [CCD]

S-5!® PRODUCTS ARE PROTECTED BY MULTIPLE U.S. AND FOREIGN PATENTS. VISIT OUR WEBSITE AT WWW.S-5.COM FOR COMPLETE INFORMATION ON PATENTS AND TRADEMARKS