RibBracket V

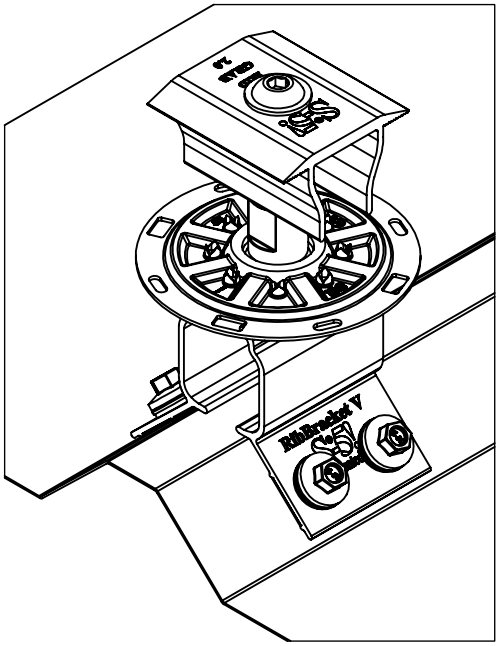

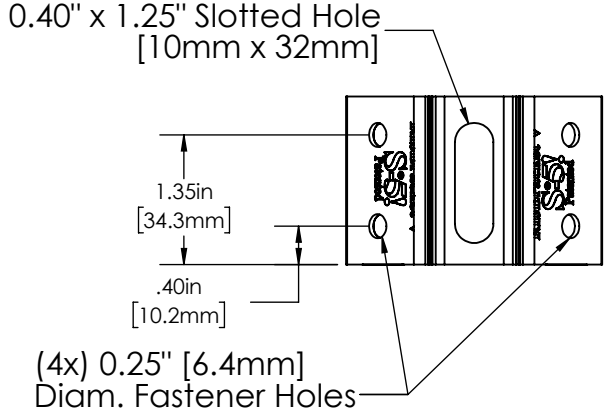

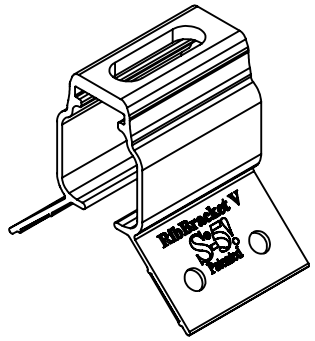

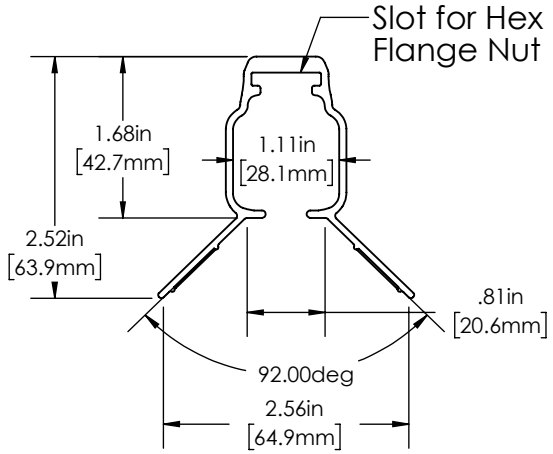

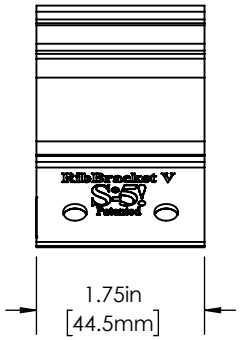

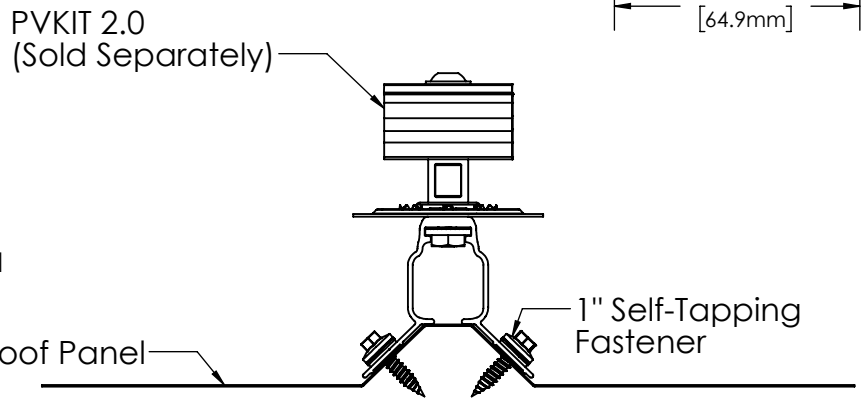

Designed to fit Ternium R101
and other similarly dimensioned
profiles.

FOR STANDING SEAM SPECIFIC MECHANICAL LOAD TEST INFORMATION AND CLAMP INSTALLATION INFORMATION PLEASE VISIT: WWW.S-5.COM

MATERIAL: 6000 Series AL	S-5! The Right Way!	METAL ROOF INNOVATIONS, LTD. 8655 TABLE BUTTE RD COLORADO SPRINGS, CO 80908 719-495-0518 719-495-0045(FAX)	
EST ASSEMBLY WEIGTH: .192 lbs [87 g]	TITLE: RibBracket V [CCD]		
SUPPLIED HARDWARE: M8-1.25 Flange Nut (4x) 1" Stainless Steel Cap Self-Tapping Screw with 5/16" Hex Head			
SCALE: 1:2	DRAWING NO. MX05-A-0-A	DRAWN BY JW	DATE 10/15/2020
WEIGHTS: Bracket: 0.105 lbs [47.6 g] Screw: 0.0180 lbs [8.2 g] Nut: 0.0145 lbs [7 g]	S-5!® PRODUCTS ARE PROTECTED BY MULTIPLE U.S. PATENTS INCLUDING 5,228,248, 5,983,588 AND 6,164,033 (OTHERS ISSUED AND PENDING). EUROPEAN PATENTS ARE ALSO APPLIED FOR AND PENDING UNDER THE PATENT COOPERATION TREATY WITH DIVISIONAL FILING RIGHTS RETAINED. METAL ROOF INNOVATIONS, LTD. (LICENSOR OF S-5!® TECHNOLOGY) AGGRESSIVELY PROSECUTES PATENT INFRINGEMENT.		